Submittal Data Sheet

Wilo NL-HE – Base Mounted End Suction Pumps

NL-HE 3 x 2.5 x 5 (4 Pole)

Project:	
Engineer:	
Contractor:	
Submitted By:	Date:
Approved By:	Date:

Tag #	Model #	Flow (USGPM)	Head (Feet)	HP	Enclosure	Frame	Cycle	Phase	Voltage	RPM
	NL-HE 3 x 2.5 x 5						60Hz	3		

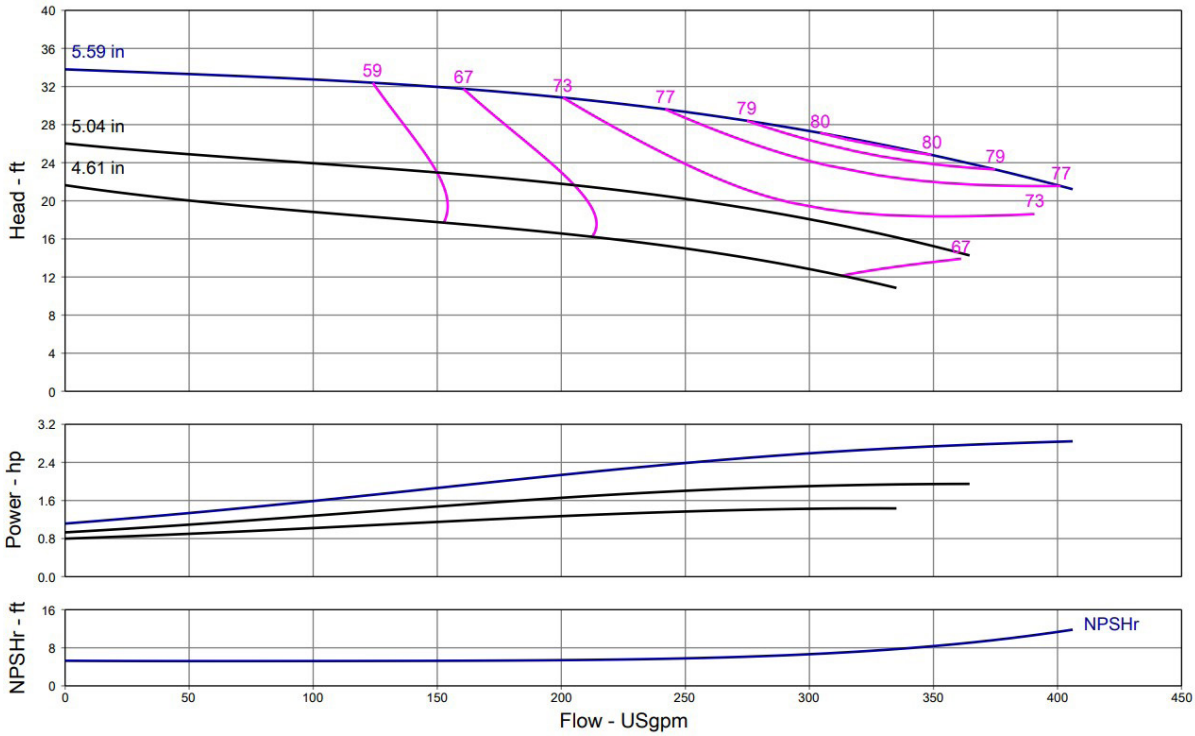

Technical Data	
PEI	
0.94	
Approved Fluids	
Heating Water	
Cooling and cold water	
Pressure /Temperature Ratings	
Ambient Temperature:	+5 °F to +104 °F (-15 °C to +40 °C)
Max Working Pressure & Temperature:	189 psi (up to 284 °F Fluid Temperature) 232 psi (up to 248 °F Fluid Temperature)
Water-Glycol Mixtures for 20-40% glycol and fluid temp ≤ 104°F (40°C)	

Materials of Construction		
☐	Pump Housing	EN-GL-250 Gray Cast Iron
☐	Impeller	EN 1.4408 Cast Stainless Steel
☐	Impeller (optional)	CC480K Bronze or EN-GJL 1030 Cast Iron
☐	Pump Shaft	1.4021 + QT700 Stainless Steel
☐	Mechanical Seal	Carbon/silicon carbide/ EPDM (E1)
☐	Other Mechanical Seals	Avail. on request
☐	Additional Spacer Coupling	Avail. on request
☐	Other:	

Approval Stamp

Submittal Data Sheet

Wilo NL-HE - Base Mounted End Suction Pumps

Dimensions & Weights

Wilo NL-HE

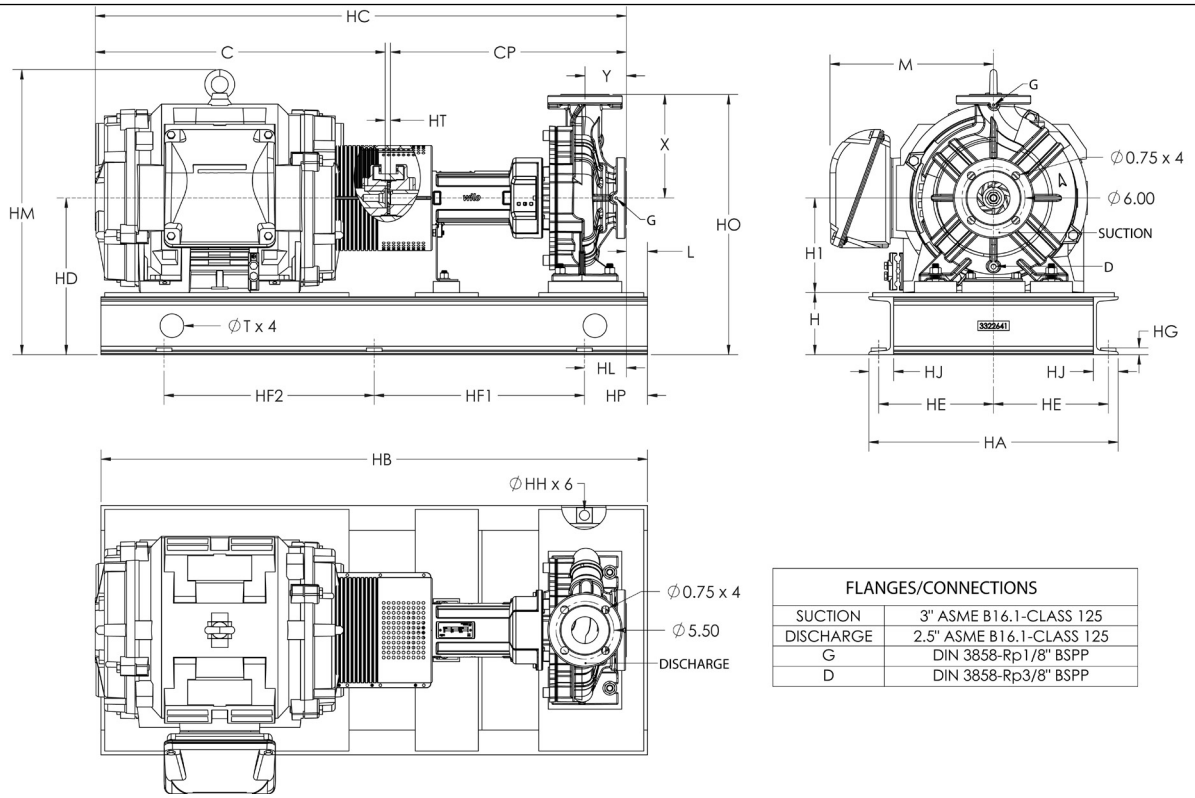

FLANGES/CONNECTIONS	
SUCTION	3" ASME B16.1-CLASS 125
DISCHARGE	2.5" ASME B16.1-CLASS 125
G	DIN 3858-Rp1/8" BSPP
D	DIN 3858-Rp3/8" BSPP

NL-HE 3 x 2.5 x 5

Motor							Dimensions - Inches																								
HP	ENCL	Frame	Volt	RPM	EFF	PF	H	H1	X	HD	HO	HM	M	HA	HE	HG	HJ	Y	HT	HC	C	CP	L	HL	T	HH	HP	HF1	HF2	HB	Wt. (lb)
1.5	ODP	143/5T	208-230/460	1760	86.5	0.77	4.3	6.3	7.1	10.6	17.7	13.9	5.9	16.3	7.4	0.57	1.9	3.9	0.50	31.0	12.3	18.1	0.96	2.54	1.50	0.80	3.5	13	13	33	245
1.5	TEFC	143/5T	208-230/460	1755	86.5	0.79	4.3	6.3	7.1	10.6	17.7	14.3	5.9	16.3	7.4	0.57	1.9	3.9	0.50	32.0	13.4	18.1	0.96	2.54	1.50	0.80	3.5	13	13	33	254
1.5	ODP	143/5T	575	1760	86.5	0.77	4.3	6.3	7.1	10.6	17.7	13.9	5.9	16.3	7.4	0.57	1.9	3.9	0.50	31.0	12.3	18.1	0.96	2.54	1.50	0.80	3.5	13	13	33	245
1.5	TEFC	143/5T	575	1755	86.5	0.79	4.3	6.3	7.1	10.6	17.7	14.3	5.9	16.3	7.4	0.57	1.9	3.9	0.50	32.0	13.4	18.1	0.96	2.54	1.50	0.80	3.5	13	13	33	253
2	ODP	143/5T	208-230/460	1740	86.5	0.81	4.3	6.3	7.1	10.6	17.7	13.9	5.9	16.3	7.4	0.57	1.9	3.9	0.50	31.0	12.3	18.1	0.96	2.54	1.50	0.80	3.5	13	13	33	242
2	TEFC	143/5T	208-230/460	1755	86.5	0.79	4.3	6.3	7.1	10.6	17.7	14.3	5.9	16.3	7.4	0.57	1.9	3.9	0.50	32.0	13.4	18.1	0.96	2.54	1.50	0.80	3.5	13	13	33	253
2	ODP	143/5T	575	1740	86.5	0.81	4.3	6.3	7.1	10.6	17.7	13.9	5.9	16.3	7.4	0.57	1.9	3.9	0.50	31.0	12.3	18.1	0.96	2.54	1.50	0.80	3.5	13	13	33	242
2	TEFC	143/5T	575	1755	86.5	0.79	4.3	6.3	7.1	10.6	17.7	14.3	5.9	16.3	7.4	0.57	1.9	3.9	0.50	32.0	13.4	18.1	0.96	2.54	1.50	0.80	3.5	13	13	33	253
3	ODP	182/4T	208-230/460	1765	89.5	0.8	4.3	6.3	7.1	10.6	17.7	14.7	6.7	17.3	7.9	0.57	1.9	3.9	0.50	33.8	15.2	18.1	0.96	3.54	1.50	0.80	4.5	13	13	35	282
3	TEFC	182/4T	208-230/460	1760	89.5	0.79	4.3	6.3	7.1	10.6	17.7	15.0	7.6	17.3	7.9	0.57	1.9	3.9	0.50	34.5	15.9	18.1	0.96	3.54	1.50	0.80	4.5	13	13	35	306
3	ODP	182/4T	575	1765	89.5	0.8	4.3	6.3	7.1	10.6	17.7	14.7	6.7	17.3	7.9	0.57	1.9	3.9	0.50	33.8	15.2	18.1	0.96	3.54	1.50	0.80	4.5	13	13	35	282
3	TEFC	182/4T	575	1760	89.5	0.79	4.3	6.3	7.1	10.6	17.7	15.0	7.6	17.3	7.9	0.57	1.9	3.9	0.50	34.5	15.9	18.1	0.96	3.54	1.50	0.80	4.5	13	13	35	304

Submittal Data Sheet

Wilo NL-HE – Base Mounted End Suction Pumps

NL-HE 3 x 2.5 x 6 (4 Pole)

Project:	
Engineer:	
Contractor:	
Submitted By:	Date:
Approved By:	Date:

Tag #	Model #	Flow (USGPM)	Head (Feet)	HP	Enclosure	Frame	Cycle	Phase	Voltage	RPM
	NL-HE 3 x 2.5 x 6						**60Hz**	**3**		

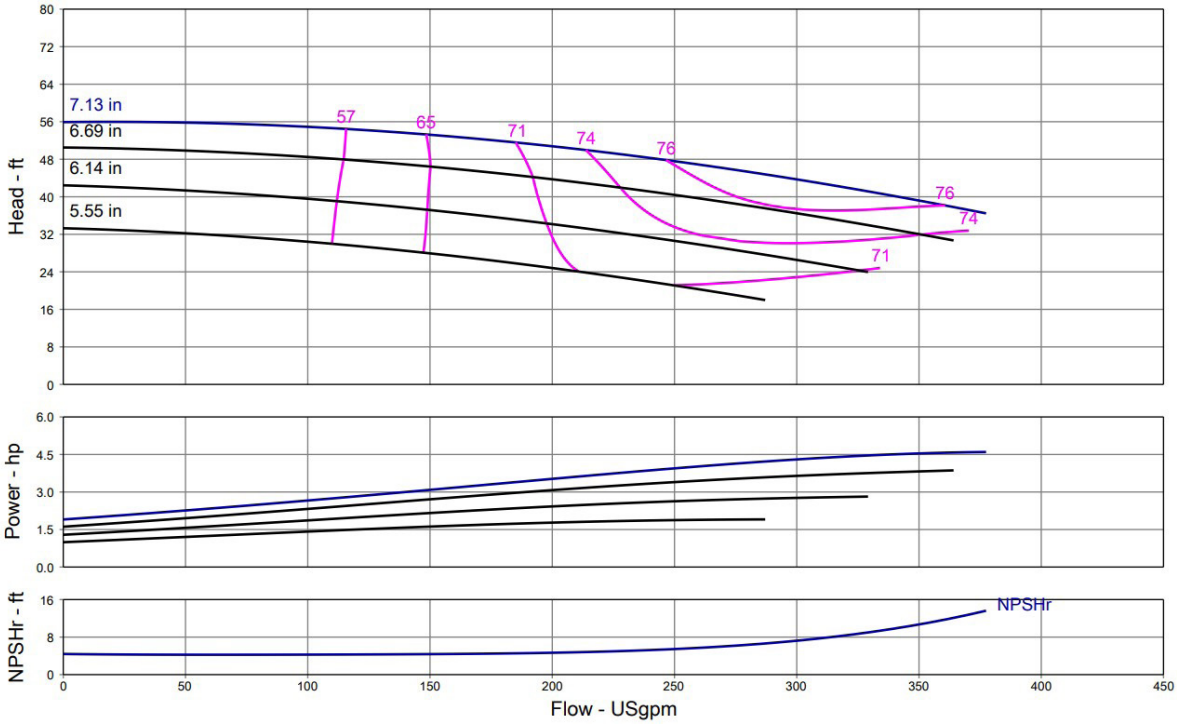

Technical Data	
PEI	
0.98	
Approved Fluids	
Heating Water	
Cooling and cold water	
Pressure /Temperature Ratings	
Ambient Temperature:	+5 °F to +104 °F (-15 °C to +40 °C)
Max Working Pressure & Temperature:	189 psi (up to 284 °F Fluid Temperature) 232 psi (up to 248 °F Fluid Temperature)
Water-Glycol Mixtures for 20-40% glycol and fluid temp ≤ 104°F (40°C)	

Materials of Construction		
☐	Pump Housing	EN-GL-250 Gray Cast Iron
☐	Impeller	EN 1.4408 Cast Stainless Steel
☐	Impeller (optional)	CC480K Bronze or EN-GJL 1030 Cast Iron
☐	Pump Shaft	1.4021 + QT700 Stainless Steel
☐	Mechanical Seal	Carbon/silicon carbide/ EPDM (E1)
☐	Other Mechanical Seals	Avail. on request
☐	Additional Spacer Coupling	Avail. on request
☐	Other:	

Approval Stamp

Submittal Data Sheet

Wilo NL-HE - Base Mounted End Suction Pumps

Dimensions & Weights

Wilo NL-HE

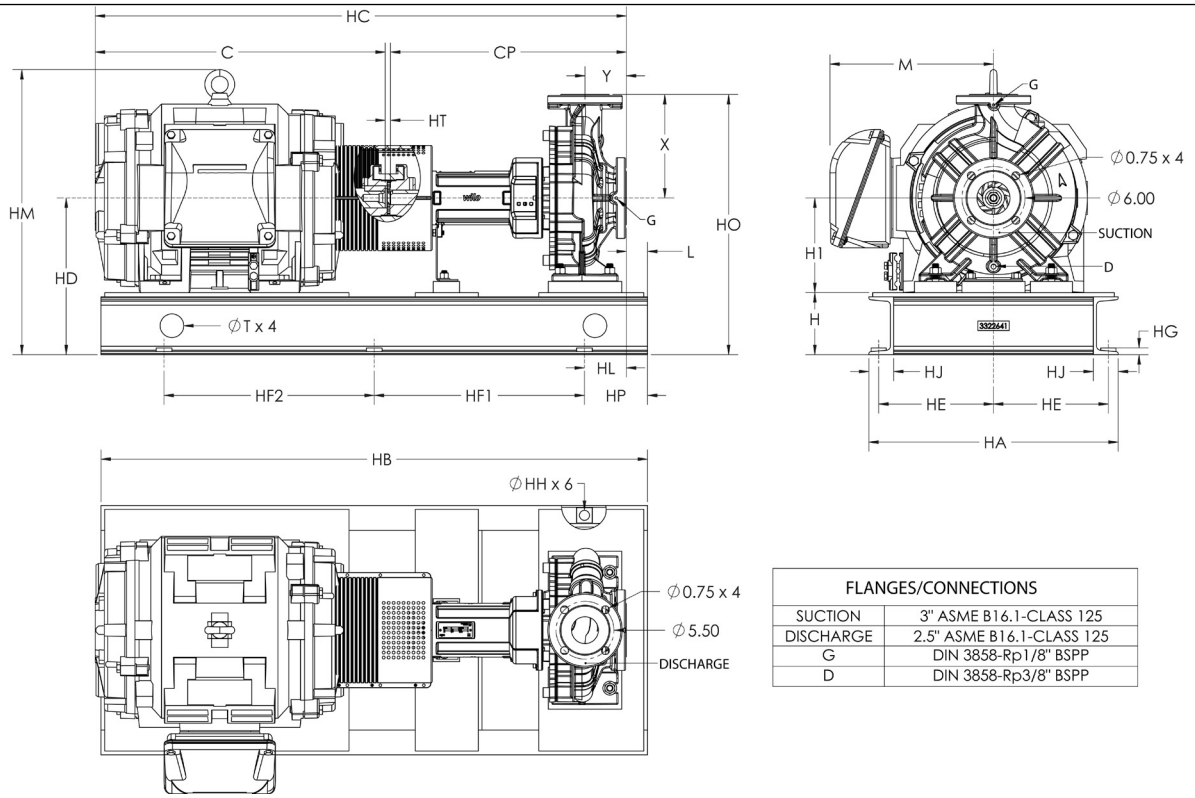

FLANGES/CONNECTIONS	
SUCTION	3" ASME B16.1-CLASS 125
DISCHARGE	2.5" ASME B16.1-CLASS 125
G	DIN 3858-Rp1/8" BSPP
D	DIN 3858-Rp3/8" BSPP

NL-HE 3 x 2.5 x 6

Motor							Dimensions - Inches																								
HP	ENCL	Frame	Volt	RPM	EFF	PF	H	H1	X	HD	HO	HM	M	HA	HE	HG	HJ	Y	HT	HC	C	CP	L	HL	T	HH	HP	HF1	HF2	HB	Wt. (lb)
2	ODP	143/5T	208-230/460	1740	86.5	0.81	4.3	6.3	7.9	10.6	18.5	13.9	5.9	16.3	7.4	0.57	1.9	3.9	0.50	31.0	12.3	18.1	0.96	2.54	1.50	0.80	3.5	13	13	33	254
2	TEFC	143/5T	208-230/460	1755	86.5	0.79	4.3	6.3	7.9	10.6	18.5	14.3	5.9	16.3	7.4	0.57	1.9	3.9	0.50	32.0	13.4	18.1	0.96	2.54	1.50	0.80	3.5	13	13	33	265
2	ODP	143/5T	575	1740	86.5	0.81	4.3	6.3	7.9	10.6	18.5	13.9	5.9	16.3	7.4	0.57	1.9	3.9	0.50	31.0	12.3	18.1	0.96	2.54	1.50	0.80	3.5	13	13	33	254
2	TEFC	143/5T	575	1755	86.5	0.79	4.3	6.3	7.9	10.6	18.5	14.3	5.9	16.3	7.4	0.57	1.9	3.9	0.50	32.0	13.4	18.1	0.96	2.54	1.50	0.80	3.5	13	13	33	264
3	ODP	182/4T	208-230/460	1765	89.5	0.8	4.3	6.3	7.9	10.6	18.5	14.7	6.7	17.3	7.9	0.57	1.9	3.9	0.50	33.8	15.2	18.1	0.96	3.54	1.50	0.80	4.5	13	13	35	294
3	TEFC	182/4T	208-230/460	1760	89.5	0.79	4.3	6.3	7.9	10.6	18.5	15.0	7.6	17.3	7.9	0.57	1.9	3.9	0.50	34.5	15.9	18.1	0.96	3.54	1.50	0.80	4.5	13	13	35	318
3	ODP	182/4T	575	1765	89.5	0.8	4.3	6.3	7.9	10.6	18.5	14.7	6.7	17.3	7.9	0.57	1.9	3.9	0.50	33.8	15.2	18.1	0.96	3.54	1.50	0.80	4.5	13	13	35	294
3	TEFC	182/4T	575	1760	89.5	0.79	4.3	6.3	7.9	10.6	18.5	15.0	7.6	17.3	7.9	0.57	1.9	3.9	0.50	34.5	15.9	18.1	0.96	3.54	1.50	0.80	4.5	13	13	35	316
5	ODP	182/4T	208-230/460	1760	89.5	0.82	4.3	6.3	7.9	10.6	18.5	14.7	6.7	17.3	7.9	0.57	1.9	3.9	0.50	35.0	16.3	18.1	0.96	3.54	1.50	0.80	4.5	13	13	35	308
5	TEFC	182/4T	208-230/460	1755	89.5	0.8	4.3	6.3	7.9	10.6	18.5	15.0	7.6	17.3	7.9	0.57	1.9	3.9	0.50	34.5	15.9	18.1	0.96	3.54	1.50	0.80	4.5	13	13	35	326
5	ODP	182/4T	575	1760	89.5	0.82	4.3	6.3	7.9	10.6	18.5	14.7	6.7	17.3	7.9	0.57	1.9	3.9	0.50	35.0	16.3	18.1	0.96	3.54	1.50	0.80	4.5	13	13	35	308
5	TEFC	182/4T	575	1755	89.5	0.8	4.3	6.3	7.9	10.6	18.5	15.0	7.6	17.3	7.9	0.57	1.9	3.9	0.50	34.5	15.9	18.1	0.96	3.54	1.50	0.80	4.5	13	13	35	323

Submittal Data Sheet

Wilo NL-HE – Base Mounted End Suction Pumps

NL-HE 3 x 2.5 x 8 (4 Pole)

Project:	
Engineer:	
Contractor:	
Submitted By:	Date:
Approved By:	Date:

Tag #	Model #	Flow (USGPM)	Head (Feet)	HP	Enclosure	Frame	Cycle	Phase	Voltage	RPM
	NL-HE 3 x 2.5 x 8						**60Hz**	**3**		

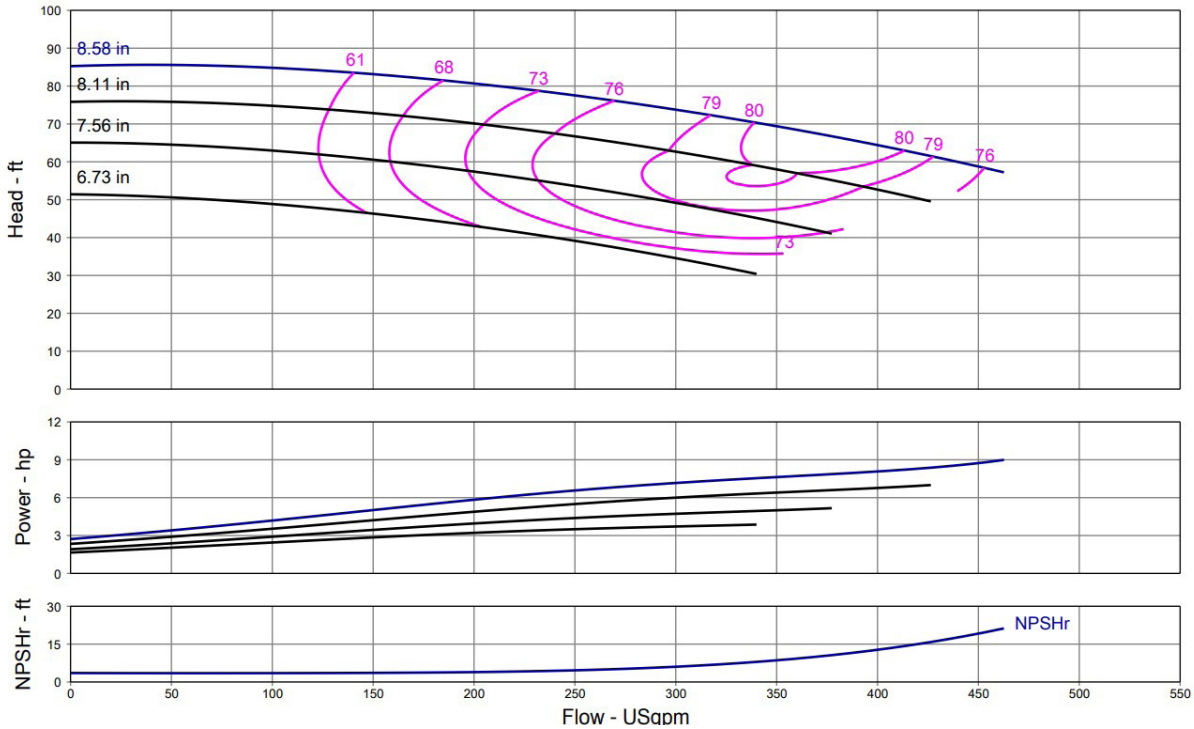

Technical Data	
PEI	
0.92	
Approved Fluids	
Heating Water	
Cooling and cold water	
Pressure /Temperature Ratings	
Ambient Temperature:	+5 °F to +104 °F (-15 °C to +40 °C)
Max Working Pressure & Temperature:	189 psi (up to 284 °F Fluid Temperature) 232 psi (up to 248 °F Fluid Temperature)
Water-Glycol Mixtures for 20-40% glycol and fluid temp ≤ 104°F (40°C)	

Materials of Construction		
☐	Pump Housing	EN-GL-250 Gray Cast Iron
☐	Impeller	EN 1.4408 Cast Stainless Steel
☐	Impeller (optional)	CC480K Bronze or EN-GJL 1030 Cast Iron
☐	Pump Shaft	1.4021 + QT700 Stainless Steel
☐	Mechanical Seal	Carbon/silicon carbide/ EPDM (E1)
☐	Other Mechanical Seals	Avail. on request
☐	Additional Spacer Coupling	Avail. on request
☐	Other:	

Approval Stamp

Submittal Data Sheet

Wilo NL-HE - Base Mounted End Suction Pumps

Dimensions & Weights

Wilo NL-HE

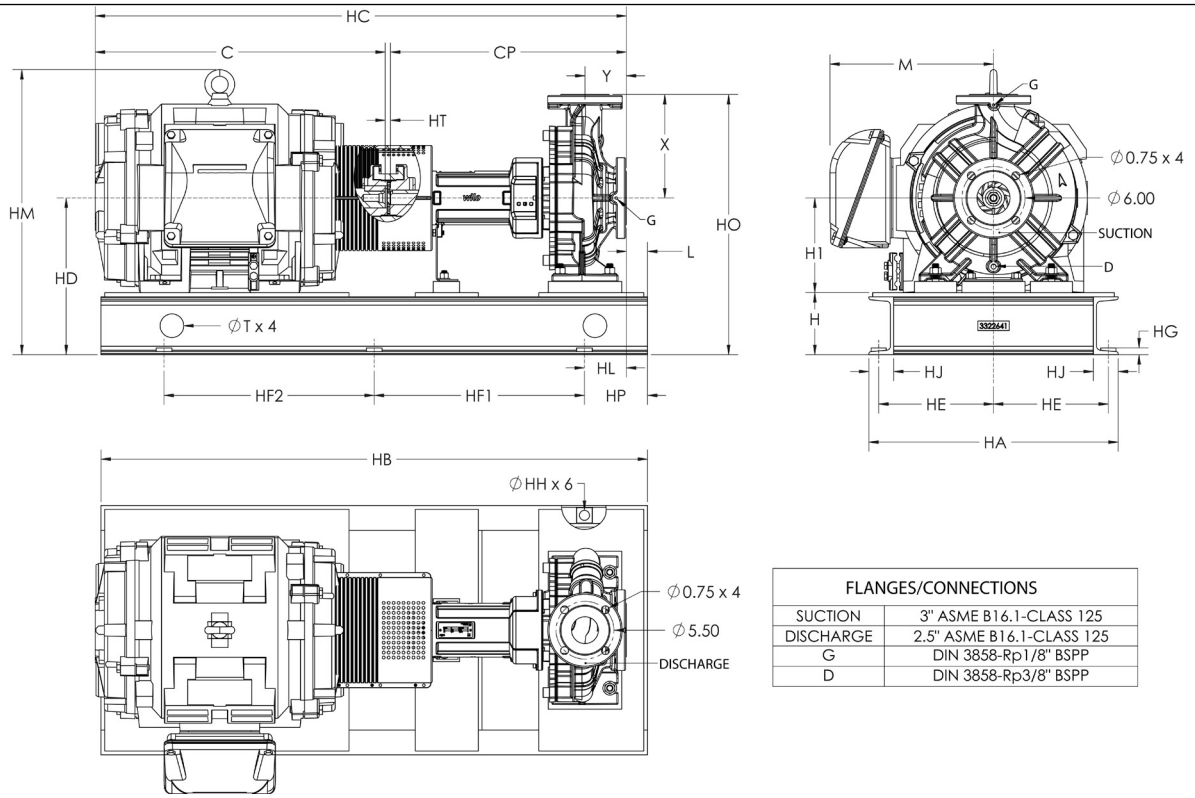

FLANGES/CONNECTIONS	
SUCTION	3" ASME B16.1-CLASS 125
DISCHARGE	2.5" ASME B16.1-CLASS 125
G	DIN 3858-Rp1/8" BSPP
D	DIN 3858-Rp3/8" BSPP

NL-HE 3 x 2.5 x 8

Motor							Dimensions - Inches																								
HP	ENCL	Frame	Volt	RPM	EFF	PF	H	H1	X	HD	HO	HM	M	HA	HE	HG	HJ	Y	HT	HC	C	CP	L	HL	T	HH	HP	HF1	HF2	HB	Wt. (lb)
5	ODP	182/4T	208-230/460	1760	89.5	0.82	4.3	7.1	8.9	11.4	20.3	15.5	6.7	17.3	7.9	0.57	1.9	3.9	0.50	35.0	16.3	18.1	1.01	3.49	1.50	0.80	4.5	13	13	35	328
5	TEFC	182/4T	208-230/460	1755	89.5	0.8	4.3	7.1	8.9	11.4	20.3	15.8	7.6	17.3	7.9	0.57	1.9	3.9	0.50	34.5	15.9	18.1	0.96	3.54	1.50	0.80	4.5	13	13	35	346
5	ODP	182/4T	575	1760	89.5	0.82	4.3	7.1	8.9	11.4	20.3	15.5	6.7	17.3	7.9	0.57	1.9	3.9	0.50	35.0	16.3	18.1	1.01	3.49	1.50	0.80	4.5	13	13	35	328
5	TEFC	182/4T	575	1755	89.5	0.8	4.3	7.1	8.9	11.4	20.3	15.8	7.6	17.3	7.9	0.57	1.9	3.9	0.50	34.5	15.9	18.1	0.96	3.54	1.50	0.80	4.5	13	13	35	344
7.5	ODP	213/5T	208-230/460	1770	91	0.82	4.3	7.1	8.9	11.4	20.3	16.3	8.0	17.3	7.9	0.57	1.9	3.9	0.50	35.2	16.6	18.1	1.01	3.49	1.50	0.80	4.5	15	15	39	371
7.5	TEFC	213/5T	208-230/460	1765	91.7	0.82	4.3	7.1	8.9	11.4	20.3	17.0	8.6	17.3	7.9	0.57	1.9	3.9	0.50	38.2	19.5	18.1	0.96	3.54	1.50	0.80	4.5	15	15	39	423
7.5	ODP	213/5T	575	1770	91	0.82	4.3	7.1	8.9	11.4	20.3	16.3	8.0	17.3	7.9	0.57	1.9	3.9	0.50	35.2	16.6	18.1	1.01	3.49	1.50	0.80	4.5	15	15	39	371
7.5	TEFC	213/5T	575	1765	91.7	0.82	4.3	7.1	8.9	11.4	20.3	17.0	8.6	17.3	7.9	0.57	1.9	3.9	0.50	38.2	19.5	18.1	0.96	3.54	1.50	0.80	4.5	15	15	39	422
10	ODP	213/5T	208-230/460	1770	91.7	0.83	4.3	7.1	8.9	11.4	20.3	16.3	8.0	17.3	7.9	0.57	1.9	3.9	0.50	35.2	16.6	18.1	1.01	3.49	1.50	0.80	4.5	15	15	39	377
10	TEFC	213/5T	208-230/460	1765	91.7	0.83	4.3	7.1	8.9	11.4	20.3	17.0	8.6	17.3	7.9	0.57	1.9	3.9	0.50	38.2	19.5	18.1	0.96	3.54	1.50	0.80	4.5	15	15	39	434
10	ODP	213/5T	575	1770	91.7	0.83	4.3	7.1	8.9	11.4	20.3	16.3	8.0	17.3	7.9	0.57	1.9	3.9	0.50	35.2	16.6	18.1	1.01	3.49	1.50	0.80	4.5	15	15	39	377
10	TEFC	213/5T	575	1765	91.7	0.83	4.3	7.1	8.9	11.4	20.3	17.0	8.6	17.3	7.9	0.57	1.9	3.9	0.50	38.2	19.5	18.1	0.96	3.54	1.50	0.80	4.5	15	15	39	433

Submittal Data Sheet

Wilo NL-HE – Base Mounted End Suction Pumps

NL-HE 3 x 2.5 x 10 (4 Pole)

Project:	
Engineer:	
Contractor:	
Submitted By:	Date:
Approved By:	Date:

Tag #	Model #	Flow (USGPM)	Head (Feet)	HP	Enclosure	Frame	Cycle	Phase	Voltage	RPM
	NL-HE 3 x 2.5 x 10						60Hz	3		

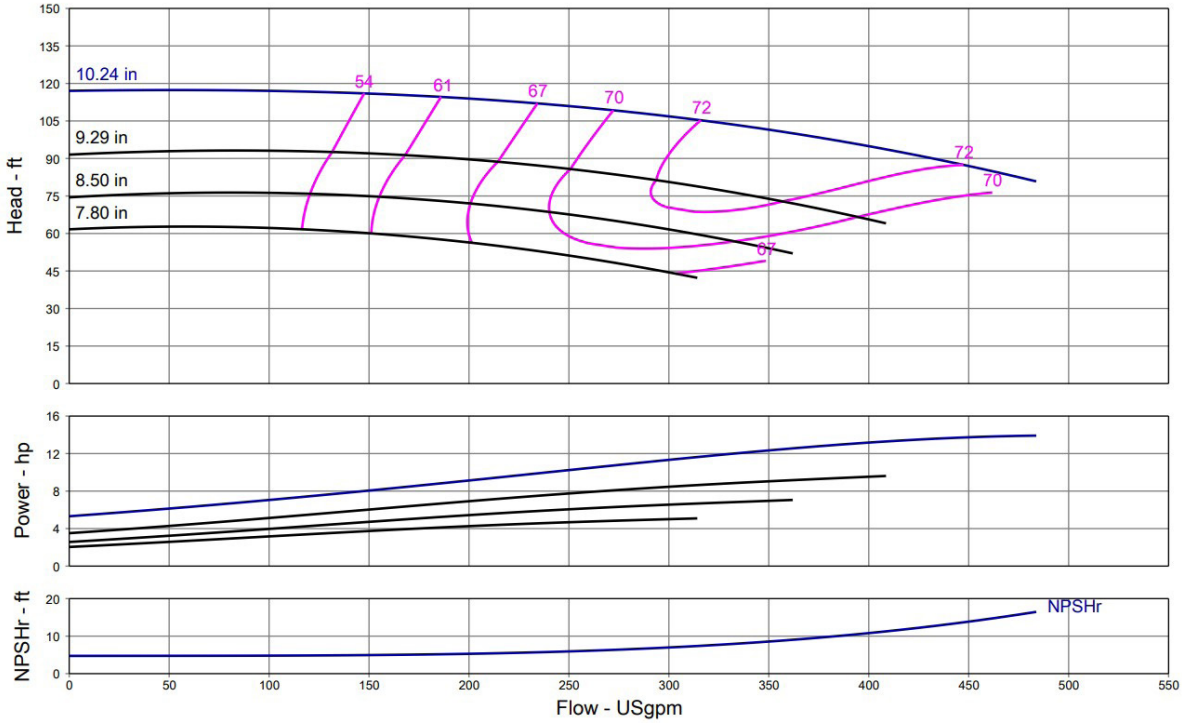

Technical Data	
PEI	
0.96	
Approved Fluids	
Heating Water	
Cooling and cold water	
Pressure /Temperature Ratings	
Ambient Temperature:	+5 °F to +104 °F (-15 °C to +40 °C)
Max Working Pressure & Temperature:	189 psi (up to 284 °F Fluid Temperature) 232 psi (up to 248 °F Fluid Temperature)
Water-Glycol Mixtures for 20-40% glycol and fluid temp ≤ 104°F (40°C)	

Materials of Construction		
☐	Pump Housing	EN-GL-250 Gray Cast Iron
☐	Impeller	EN 1.4408 Cast Stainless Steel
☐	Impeller (optional)	CC480K Bronze or EN-GJL 1030 Cast Iron
☐	Pump Shaft	1.4021 + QT700 Stainless Steel
☐	Mechanical Seal	Carbon/silicon carbide/ EPDM (E1)
☐	Other Mechanical Seals	Avail. on request
☐	Additional Spacer Coupling	Avail. on request
☐	Other:	

Approval Stamp

Submittal Data Sheet

Wilo NL-HE - Base Mounted End Suction Pumps

Dimensions & Weights

Wilo NL-HE

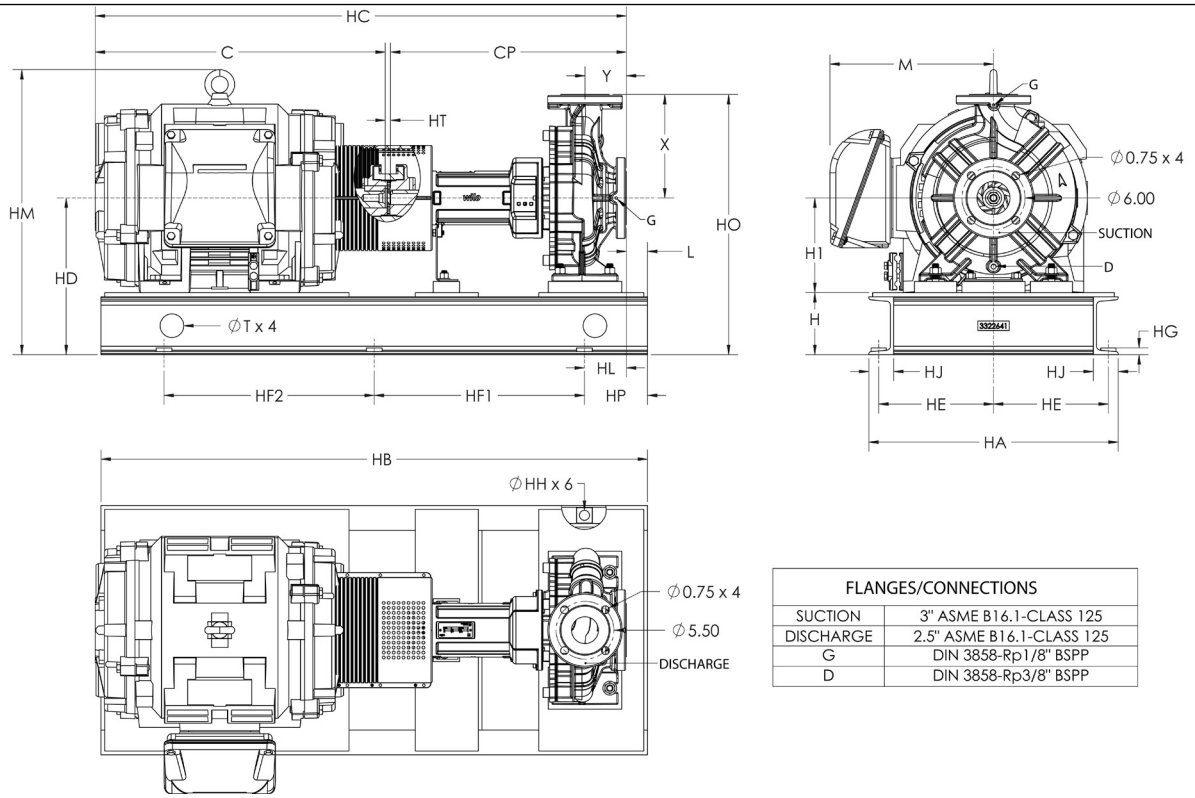

FLANGES/CONNECTIONS	
SUCTION	3" ASME B16.1-CLASS 125
DISCHARGE	2.5" ASME B16.1-CLASS 125
G	DIN 3858-Rp1/8" BSPP
D	DIN 3858-Rp3/8" BSPP

NL-HE 3 x 2.5 x 10

Motor							Dimensions - Inches																								
HP	ENCL	Frame	Volt	RPM	EFF	PF	H	H1	X	HD	HO	HM	M	HA	HE	HG	HJ	Y	HT	HC	C	CP	L	HL	T	HH	HP	HF1	HF2	HB	Wt. (lb)
7.5	ODP	213/5T	208-230/460	1770	91	0.82	5.9	7.9	9.8	13.8	23.6	18.7	8.0	21.7	9.9	0.64	2.4	3.9	0.50	39.6	16.6	22.5	2.01	2.74	2.25	0.95	4.8	19	19	48	522
7.5	TEFC	213/5T	208-230/460	1765	91.7	0.82	5.9	7.9	9.8	13.8	23.6	19.4	8.6	21.7	9.9	0.64	2.4	3.9	0.50	42.5	19.5	22.5	2.01	2.74	2.25	0.95	4.8	19	19	48	574
7.5	ODP	213/5T	575	1770	91	0.82	5.9	7.9	9.8	13.8	23.6	18.7	8.0	21.7	9.9	0.64	2.4	3.9	0.50	39.6	16.6	22.5	2.01	2.74	2.25	0.95	4.8	19	19	48	522
7.5	TEFC	213/5T	575	1765	91.7	0.82	5.9	7.9	9.8	13.8	23.6	19.4	8.6	21.7	9.9	0.64	2.4	3.9	0.50	42.5	19.5	22.5	2.01	2.74	2.25	0.95	4.8	19	19	48	573
10	ODP	213/5T	208-230/460	1770	91.7	0.83	5.9	7.9	9.8	13.8	23.6	18.7	8.0	21.7	9.9	0.64	2.4	3.9	0.50	39.6	16.6	22.5	2.01	2.74	2.25	0.95	4.8	19	19	48	528
10	TEFC	213/5T	208-230/460	1765	91.7	0.83	5.9	7.9	9.8	13.8	23.6	19.4	8.6	21.7	9.9	0.64	2.4	3.9	0.50	42.5	19.5	22.5	2.01	2.74	2.25	0.95	4.8	19	19	48	585
10	ODP	213/5T	575	1770	91.7	0.83	5.9	7.9	9.8	13.8	23.6	18.7	8.0	21.7	9.9	0.64	2.4	3.9	0.50	39.6	16.6	22.5	2.01	2.74	2.25	0.95	4.8	19	19	48	528
10	TEFC	213/5T	575	1765	91.7	0.83	5.9	7.9	9.8	13.8	23.6	19.4	8.6	21.7	9.9	0.64	2.4	3.9	0.50	42.5	19.5	22.5	2.01	2.74	2.25	0.95	4.8	19	19	48	584
15	ODP	254/6T	208-230/460	1775	93	0.8	5.9	7.9	9.8	13.8	23.6	19.5	9.5	21.7	9.9	0.64	2.4	3.9	0.50	43.4	20.5	22.5	2.01	2.74	2.25	0.95	4.8	19	19	48	597
15	TEFC	254/6T	208-230/460	1765	92.4	0.83	5.9	7.9	9.8	13.8	23.6	22.4	10.5	23.7	10.9	0.64	2.4	3.9	0.50	48.0	25.0	22.5	2.01	3.99	2.25	0.95	6.0	20	20	52	776
15	ODP	254/6T	575	1775	93	0.8	5.9	7.9	9.8	13.8	23.6	19.5	9.5	21.7	9.9	0.64	2.4	3.9	0.50	43.4	20.5	22.5	2.01	2.74	2.25	0.95	4.8	19	19	48	597
15	TEFC	254/6T	575	1765	92.4	0.83	5.9	7.9	9.8	13.8	23.6	22.4	10.5	23.7	10.9	0.64	2.4	3.9	0.50	48.0	25.0	22.5	2.01	3.99	2.25	0.95	6.0	20	20	52	774

Submittal Data Sheet

Wilo NL-HE – Base Mounted End Suction Pumps

NL-HE 3 x 2.5 x 12 (4 Pole)

Project:	
Engineer:	
Contractor:	
Submitted By:	Date:
Approved By:	Date:

Tag #	Model #	Flow (USGPM)	Head (Feet)	HP	Enclosure	Frame	Cycle	Phase	Voltage	RPM
	NL-HE 3 x 2.5 x 12						60Hz	3		

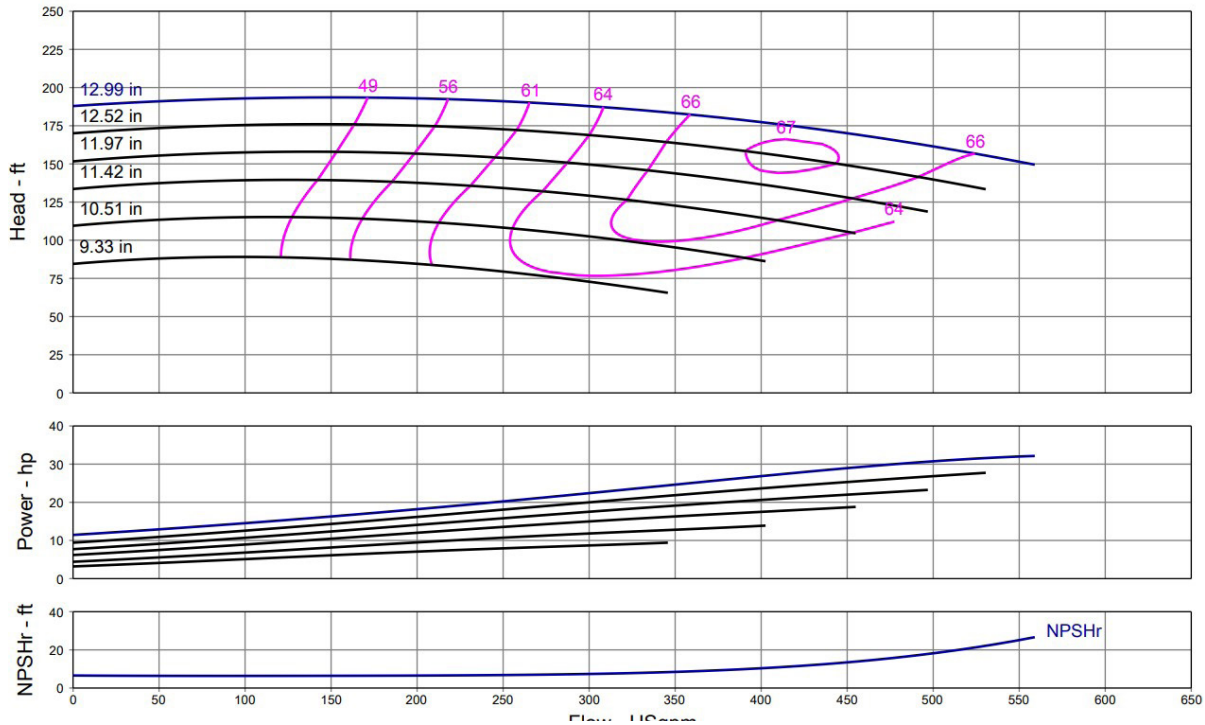

Technical Data	
PEI	
0.94	
Approved Fluids	
Heating Water	
Cooling and cold water	
Pressure /Temperature Ratings	
Ambient Temperature:	+5 °F to +104 °F (-15 °C to +40 °C)
Max Working Pressure & Temperature:	189 psi (up to 284 °F Fluid Temperature) 232 psi (up to 248 °F Fluid Temperature)
Water-Glycol Mixtures for 20-40% glycol and fluid temp ≤ 104°F (40°C)	

Materials of Construction		
☐	Pump Housing	EN-GL-250 Gray Cast Iron
☐	Impeller	EN 1.4408 Cast Stainless Steel
☐	Impeller (optional)	CC480K Bronze or EN-GJL 1030 Cast Iron
☐	Pump Shaft	1.4021 + QT700 Stainless Steel
☐	Mechanical Seal	Carbon/silicon carbide/ EPDM (E1)
☐	Other Mechanical Seals	Avail. on request
☐	Additional Spacer Coupling	Avail. on request
☐	Other:	

Approval Stamp

Submittal Data Sheet

Wilo NL-HE – Base Mounted End Suction Pumps

Dimensions & Weights

Wilo NL-HE

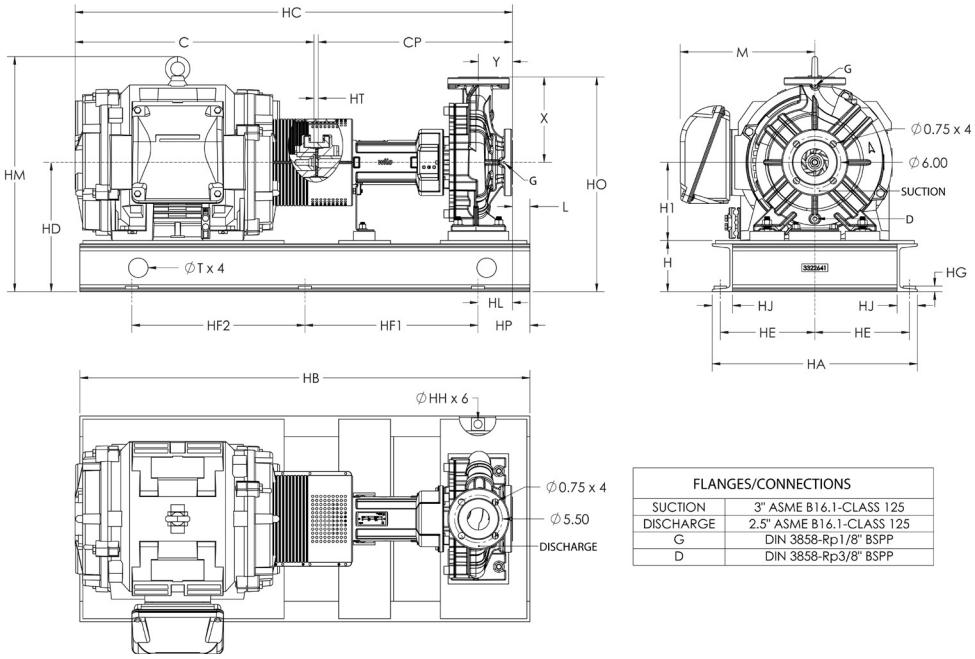

FLANGES/CONNECTIONS	
SUCTION	3" ASME B16.1-CLASS 125
DISCHARGE	2.5" ASME B16.1-CLASS 125
G	DIN 3858-Rp1/8" BSPP
D	DIN 3858-Rp3/8" BSPP

NL-HE 3 x 2.5 x 12

Motor							Dimensions – Inches																								
HP	ENCL	Frame	Volt	RPM	EFF	PF	H	H1	X	HD	HO	HM	M	HA	HE	HG	HJ	Y	HT	HC	C	CP	L	HL	T	HH	HP	HF1	HF2	HB	Wt. (lb)
10	ODP	213/5T	208-230/460	1770	91.7	0.83	5.9	8.9	11.0	14.8	25.8	19.7	8.0	21.7	9.9	0.64	2.4	4.9	0.50	40.5	16.6	23.4	1.03	3.73	2.25	0.95	4.8	19	19	48	581
10	TEFC	213/5T	208-230/460	1765	91.7	0.83	5.9	8.9	11.0	14.8	25.8	20.3	8.6	21.7	9.9	0.64	2.4	4.9	0.50	43.5	19.5	23.4	1.03	3.73	2.25	0.95	4.8	19	19	48	639
10	ODP	213/5T	575	1770	91.7	0.83	5.9	8.9	11.0	14.8	25.8	19.7	8.0	21.7	9.9	0.64	2.4	4.9	0.50	40.5	16.6	23.4	1.03	3.73	2.25	0.95	4.8	19	19	48	581
10	TEFC	213/5T	575	1765	91.7	0.83	5.9	8.9	11.0	14.8	25.8	20.3	8.6	21.7	9.9	0.64	2.4	4.9	0.50	43.5	19.5	23.4	1.03	3.73	2.25	0.95	4.8	19	19	48	638
15	ODP	254/6T	208-230/460	1775	93	0.8	5.9	8.9	11.0	14.8	25.8	20.5	9.5	21.7	9.9	0.64	2.4	4.9	0.50	44.4	20.5	23.4	1.03	3.73	2.25	0.95	4.8	19	19	48	651
15	TEFC	254/6T	208-230/460	1765	92.4	0.83	5.9	8.9	11.0	14.8	25.8	23.4	10.5	23.7	10.9	0.64	2.4	4.9	0.50	49.0	25.0	23.4	1.03	4.98	2.25	0.95	6.0	20	20	52	831
15	ODP	254/6T	575	1775	93	0.8	5.9	8.9	11.0	14.8	25.8	20.5	9.5	21.7	9.9	0.64	2.4	4.9	0.50	44.4	20.5	23.4	1.03	3.73	2.25	0.95	4.8	19	19	48	651
15	TEFC	254/6T	575	1765	92.4	0.83	5.9	8.9	11.0	14.8	25.8	23.4	10.5	23.7	10.9	0.64	2.4	4.9	0.50	49.0	25.0	23.4	1.03	4.98	2.25	0.95	6.0	20	20	52	829
20	ODP	254/6T	208-230/460	1770	93	0.81	5.9	8.9	11.0	14.8	25.8	20.5	9.5	21.7	9.9	0.64	2.4	4.9	0.50	44.4	20.5	23.4	1.03	3.73	2.25	0.95	4.8	19	19	48	676
20	TEFC	254/6T	208-230/460	1765	93	0.84	5.9	8.9	11.0	14.8	25.8	23.4	10.5	23.7	10.9	0.64	2.4	4.9	0.50	49.0	25.0	23.4	1.03	4.98	2.25	0.95	6.0	20	20	52	879
20	ODP	254/6T	575	1770	93	0.81	5.9	8.9	11.0	14.8	25.8	20.5	9.5	21.7	9.9	0.64	2.4	4.9	0.50	44.4	20.5	23.4	1.03	3.73	2.25	0.95	4.8	19	19	48	675
20	TEFC	254/6T	575	1765	93	0.84	5.9	8.9	11.0	14.8	25.8	23.4	10.5	23.7	10.9	0.64	2.4	4.9	0.50	49.0	25.0	23.4	1.03	4.98	2.25	0.95	6.0	20	20	52	877
25	ODP	284T	208-230/460	1770	93.6	0.84	5.9	8.9	11.0	14.8	25.8	23.5	11.9	23.7	10.9	0.64	2.4	4.9	0.50	47.1	23.2	23.4	1.03	4.98	2.25	0.95	6.0	20	20	52	874
25	TEFC	284/6T	208-230/460	1765	93.6	0.84	5.9	8.9	11.0	14.8	25.8	23.9	11.1	23.7	10.9	0.64	2.4	4.9	0.50	51.9	27.9	23.4	1.03	4.98	2.25	0.95	6.0	20	20	52	938
25	ODP	284T	575	1770	93.6	0.84	5.9	8.9	11.0	14.8	25.8	23.5	11.9	23.7	10.9	0.64	2.4	4.9	0.50	47.1	23.2	23.4	1.03	4.98	2.25	0.95	6.0	20	20	52	873
25	TEFC	284/6T	575	1765	93.6	0.84	5.9	8.9	11.0	14.8	25.8	23.9	11.1	23.7	10.9	0.64	2.4	4.9	0.50	51.9	27.9	23.4	1.03	4.98	2.25	0.95	6.0	20	20	52	936
30	ODP	284/6T	208-230/460	1770	94.1	0.84	5.9	8.9	11.0	14.8	25.8	23.5	11.9	23.7	10.9	0.64	2.4	4.9	0.50	48.6	24.7	23.4	1.03	4.98	2.25	0.95	6.0	20	20	52	928
30	TEFC	284/6T	208-230/460	1765	93.6	0.84	5.9	8.9	11.0	14.8	25.8	23.9	11.1	23.7	10.9	0.64	2.4	4.9	0.50	51.9	27.9	23.4	1.03	4.98	2.25	0.95	6.0	20	20	52	982
30	ODP	284/6T	575	1770	94.1	0.84	5.9	8.9	11.0	14.8	25.8	23.5	11.9	23.7	10.9	0.64	2.4	4.9	0.50	48.6	24.7	23.4	1.03	4.98	2.25	0.95	6.0	20	20	52	927
30	TEFC	284/6T	575	1765	93.6	0.84	5.9	8.9	11.0	14.8	25.8	23.9	11.1	23.7	10.9	0.64	2.4	4.9	0.50	51.9	27.9	23.4	1.03	4.98	2.25	0.95	6.0	20	20	52	980
40	ODP	324T	208-230/460	1775	94.1	0.84	5.9	8.9	11.0	14.8	25.8	24.5	13.4	23.7	10.9	0.64	2.4	4.9	0.50	49.8	25.8	23.4	1.03	4.98	2.25	0.95	6.0	20	20	52	973
40	TEFC	324/6T	208-230/460	1770	94.1	0.85	6.0	8.9	11.0	14.8	25.9	25.2	12.6	26.7	12.4	0.64	2.4	4.9	0.50	55.0	31.1	23.4	1.33	5.68	2.25	0.95	7.0	22	22	58	1174
40	ODP	324T	575	1775	94.1	0.84	5.9	8.9	11.0	14.8	25.8	24.5	13.4	23.7	10.9	0.64	2.4	4.9	0.50	49.8	25.8	23.4	1.03	4.98	2.25	0.95	6.0	20	20	52	971
40	TEFC	324/6T	575	1770	94.1	0.85	6.0	8.9	11.0	14.8	25.9	25.2	12.6	26.7	12.4	0.64	2.4	4.9	0.50	55.0	31.1	23.4	1.33	5.68	2.25	0.95	7.0	22	22	58	1171