Wilo-ElectronicControl

D Einbau- und Betriebsanleitung

GB Installation and operating instructions

F Notice de montage et de mise en service

NL Inbouw- en bedieningsvoorschriften

E Instrucciones de instalación y funcionamiento

I Istruzioni di montaggio, uso e manutenzione

GR Οδηγίες εγκατάστασης και λειτουργίας

RUS Инструкция по монтажу и эксплуатации

4 159 796-Ed.01/2011-05

Fig. 1:

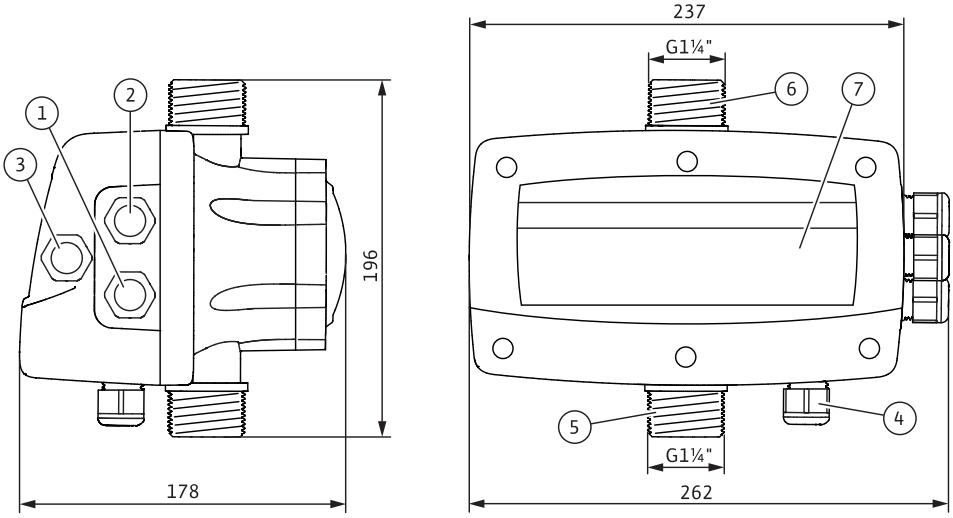

Fig. 2:

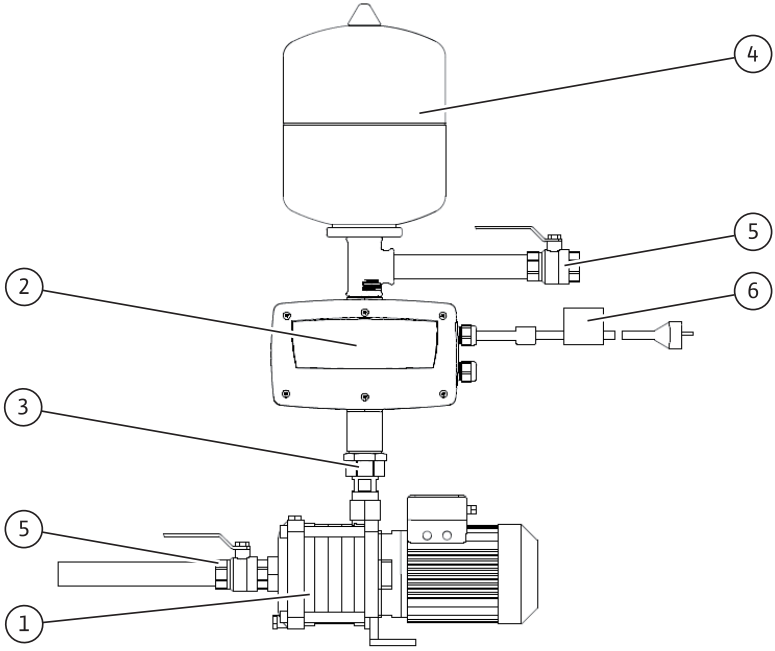

Fig. 3:

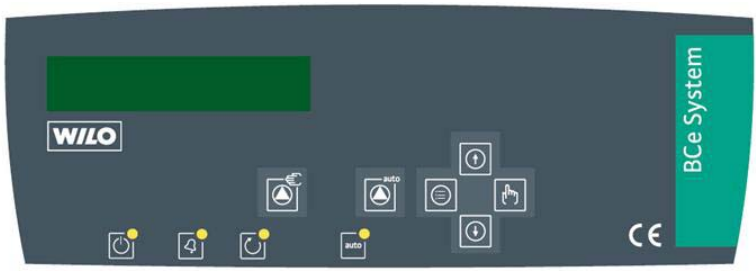

Fig. 4:

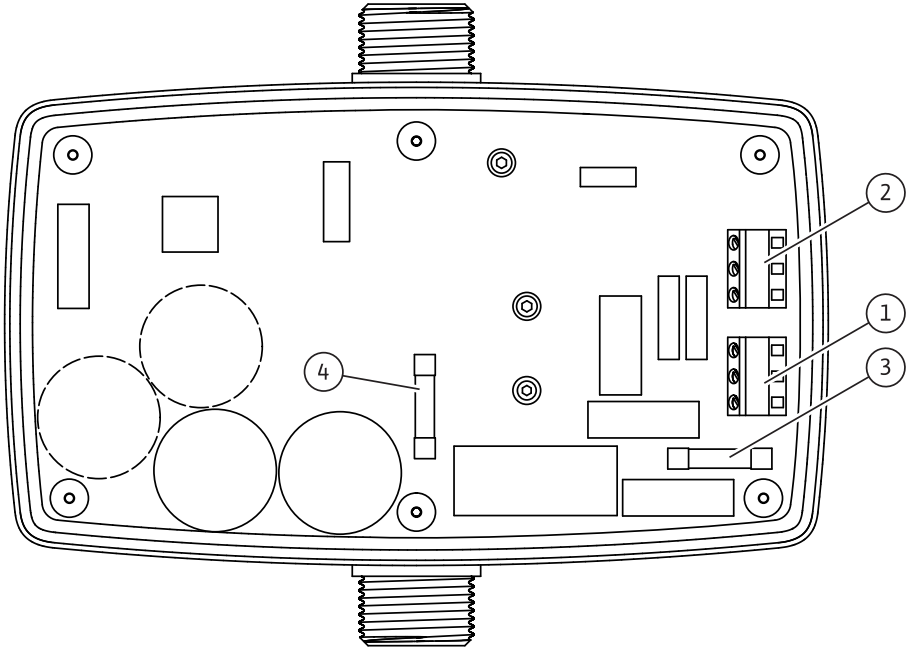

Fig. 5:

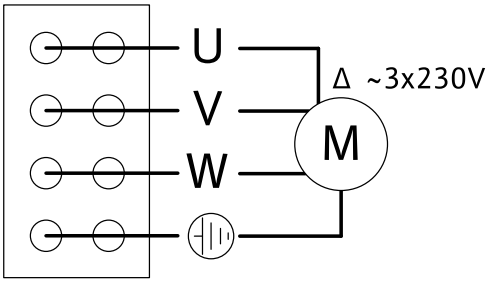

Fig. 6:

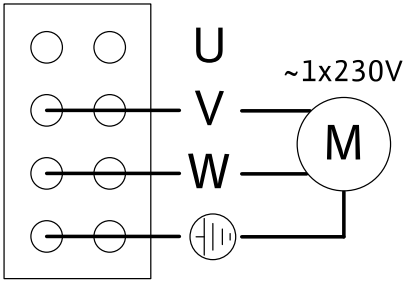

Fig. 7:

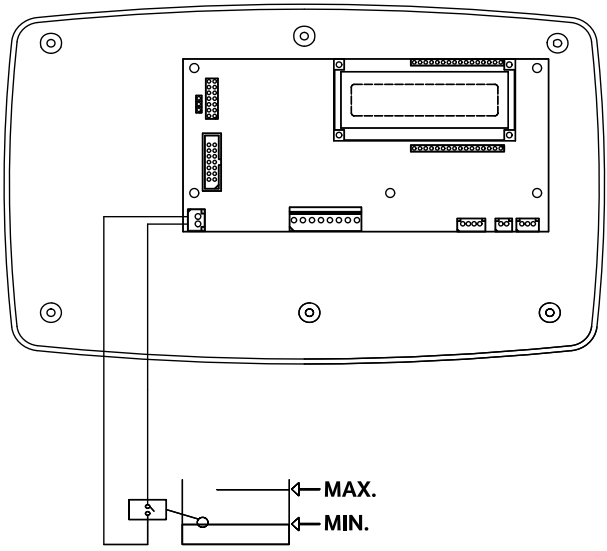

1 General information

About this document

The language of the original installation and operating instruction is French. All other languages of this instruction are translations of the original installation and operating instruction.

This installation and operating instruction is an integral part of the product. It must be kept readily available at the place where the product is installed. Strict adherence to this instruction is a precondition for a correct installation and proper use of the product.

This installation and operating instruction corresponds to the relevant version of the product and the underlying safety standards valid at the time of going to print.

EC declaration of conformity:

A copy of the EC declaration of conformity is a component of this installation and operating instruction. If the ranges mentioned in this instruction are subject to changes without any prior approval, this declaration is no more valid.

2 Safety

This operating instruction contains basic information which must be adhered to during installation and operation. For this reason, this operating instruction must, without fail, be read by the service technician and the responsible operator before installation and commissioning.

It is not only the general safety instructions listed under the main point "safety" that must be adhered to but also the special safety instructions with danger symbols included under the following main points.

2.1 Indication of instructions in the operating instruction

Symbols:

General danger symbol

Danger due to electrical voltage

Note:

Signals:

DANGER!

Acutely dangerous situation

Non-observance results in death or the most serious of injuries.

WARNING!
The user can suffer (serious) injuries. 'Warning' implies that (serious) injury to persons is probable if this information is disregarded.

CAUTION!
There is a risk of damaging to the system/installation. 'Caution' implies that damage to the product and its respective operation are likely if the information is disregarded.

NOTE: Useful information about product use. It draws attention to possible problems.

2.2 Personnel qualification

The personnel in charge of the installation and operating of the product must have the appropriate qualifications for this work.

2.3 Dangers in the event of non-observance of the safety instructions

Non-observance of the safety instructions can result in risk of injury to persons and damage to the system or installation. Non-observance of the safety instructions can involve the loss of any claims for damages.
In detail, non-observance can, for example, result in the following risks:

- Failure of the main functions of the system or the installation,
- Failure of the maintenance and repair processes specified,
- Risks to persons due to electrical, mechanical and bacteriological effects,
- Property damage.

2.4 Safety instructions for the operator

The existing directives for accident prevention must be adhered to.
Danger from electrical current must be eliminated. Local directives or general directives [e.g. IEC, VDE etc.] and local power supply companies must be adhered to.
Risks due to mechanical or bacteriological effects must be prevented. Local rules and guidelines relating to sewage technology must be adhered to.
This appliance is not intended for use by persons (including children) with reduced physical, sensory or mental capabilities, or lack of experience and knowledge, unless they have been given supervision or instruction concerning use of the appliance by a person responsible for their safety.
Children must be supervised to be sure they do not play with the appliance.

2.5 Safety instructions for inspection and installation works

The operator must ensure that all these works are carried out by authorised and qualified personnel, who are sufficiently informed from their own detailed study of the operating instruction.
Works on the system or installation must only be carried out when at a standstill. All processes described in the installation and operating instruction for shutting down the system/installation must be strictly observed.

2.6 Unauthorized modification and use of spare parts

Modifications to the system or installation are only allowed with prior agreement from the manufacturer. Original spare parts and accessories authorised by the manufacturer ensure safety. The use of other parts can nullify the liability from the results of their usage.

2.7 Improper use

The operational safety of the system or installation supplied is only guaranteed for use in accordance with conditions specified in section 4 of the installation and operating instructions. The limit values must on no account fall under or exceed those specified in the catalogue or data sheet.

3 Transport and storage

The product is delivered in a cardboard box. It is protected against moisture and dust.

As soon as the product arrives, immediately check it for any transport damage. In case of transport damage, initiate the necessary procedures with the forwarding agent.

CAUTION! Danger of property damage!
When assembling the product on a pump, do not use the ElectronicControl to handle the complete pump set.

CAUTION! Danger of property damage!
In case of a later installation keep the product in a dry place. Protect it against any shock and external impacts (such as moisture, frost, etc. ...)

4 Intended use

The ElectronicControl is a frequency inverter designed to control pumps for non aggressive clear water containing no suspended particles.

5 Product information

5.1 Type key

Example : ElectronicControl MT6	
ElectronicControl	Automatism type with frequency inverter
M	Electrical supply of the ElectronicControl 1~230V
T	Electrical supply of the motor • T = 3~230V • M = 1~230V
6	Maximal current delivered in A

5.2 Technical data	
Maximum operating pressure	15 bar
Setting range	0.5 up to 12 bars
Maximum flow	15 m³/h
Maximum water temperature	40 °C
Minimum water temperature	0 °C
Maximum environment temperature	50 °C
Input voltage	1~230 V, 50/60 Hz
Protection current	+20% of the nominal current as set during 10s
Operating mode	S3: 30% (3 s ON – 7 s OFF)
Class of protection	IP55
Protection fuse of the ElectronicCo-ntrol input (fig. 4, Pos. 3)	I: 20A, type: gG, U: 500Vac, breaking capacity I1: 120kA, size: 10 x 38mm
Protection fuse of the motor input (fig. 4, Pos. 4)	I: 20A, type: high speed, U: 690Vac, breaking capacity I1: 100kA, size: 10 x 38mm

5.3 Scope of delivery

- ElectronicControl prewired (fig. 2, Pos. 2)
- EMC filter (fig. 2, Pos. 6)
- Operating instruction

5.4 Accessories

5.4.1 Accessories required

- A tank of minimum 2 liters (to be placed at the ElectronicControl discharge side, see fig. 2, Pos. 4).
- Check valve (to be placed directly at the ElectronicControl suction side, see fig. 2, Pos. 3).

5.4.2 Accessories as option

- Flow switch – dry running protection.
- Insulation valves.

6 Description and Function

6.1 Description

6.1.1 Description of the ElectronicControl (fig. 1)

Pos.	Description of the components
01	Cable gland of the ElectronicControl power supply
02	Cable gland of the pump power supply
03	Cable gland of the dry running protection
04	Cable gland of the serial communication (as option)
05	Suction
06	Discharge
07	User interface

6.1.2 Description of the installation (fig. 2)

Pos.	Description of the components
01	Pump
02	ElectronicControl
03	Check valve
04	Bladder tank
05	Insulation valves
06	EMC filter

6.1.3 User interface (fig. 3)

	Manual operating	Green led	Inverter ON
	Operating mode Hand/Auto	Red led	Blinking: current error Fix : final error
	Menu	Yellow led	Pump is working
	Enter	Green led	ON : automatic mode OFF: manual mode
	Value setting up		
	Value setting down		

6.1.4 Description of the electronic board (fig. 4)

Pos.	Description of the parts
01	Input terminal of the ElectronicControl
02	Input terminal of the motor
03	Protection fuse of the ElectronicControl input (I: 20A, type: gG, U: 500Vac, breaking capacity I1: 120kA, size: 10 x 38mm)
04	Protection fuse of the motor input (I: 20A, type: high speed, U: 690Vac, breaking capacity I1: 100kA, size: 10 x 38mm)

6.2 Function of the product

ElectronicControl contains an electronic regulation system using pressure and flow sensors and a frequency inverter.
The electronic regulation system allows to reach a constant pressure in the network whatever the flow is and to minimize the power consumption of the installation (automatic mode). The pressure will be constant according to the set point pressure originally preset.
In hand mode the pump can be tested at maximum speed.
In automatic mode the ElectronicControl starts the pump when the installation pressure (NET P) is lower than the set point pressure (P SET) minus the pressure gap set (START DELTA P).
The ElectronicControl stops after a time period set (TIME BEFORE STOP) when the installation pressure (NET P) has reached the set point pressure (P SET) and when the flow is zero.
The ElectronicControl protects the pump against (Chap 10.2):

- dry running,
- over currents,
- too high water temperatures,
- frost,
- short-circuits,
- over voltages,
- Under voltages.

In case of defect (such as dry running, overvoltage ...), the led blinks and the ElectronicControl will try to start the pump regularly. After many trials the ElectronicControl finally stops, the led is ON and does not blink anymore.

6.3 ElectronicControl setting

After connection to the pump and to the power supply, the ElectronicControl will show the model type and the software version for 10 seconds. Then the ElectronicControl shows the STANDARD display mode.
Then the ElectronicControl has to be set in accordance to the pump characteristics and to the requirement of the installation, in order to warranty a safe and efficient operation.

Press the push-button for 3 seconds to set the ElectronicControl. The user can navigate in both submenus SETTINGS or HISTORIC.

SETTINGS

This submenu allows the setting of the ElectronicControl according to the installation and the pump.

HISTORIC

This submenu displays the various counts and alarms recorded.

To select a submenu, use the the push-buttons or , then push to select it.

The values displayed in the various parameter can be changed via the push-buttons or . With the push-button the new value selected is validated and the next parameter is displayed on the screen. With the push-button you exit SETTINGS (no saving of the last change) or HISTORIC menu and go back to STANDARD display mode (or SERVICE).

NOTE: The data are saved in non-volatile memory, this allows to save data even after switching off.

6.3.1 Menu description

Display	Menu level 1	Menu level 2	Description
NET P P SET 02.0 bar 02.0 bar			Display in STANDARD mode
F P SET NET P Q 50 02.0 bar 02.0 bar 1			Display in SERVICE mode rotation frequency (Hz) + pressure setting (bar) + networkpressure (bar) + flow switch detection (1 or 0)
MENU	SETTINGS		Menu settings
LANGUAGE ENGLISH		LANGUAGE	Language setting
I. MAX. PUMP OFF		I. MAX. PUMP	Nominal current setting as mentioned on the identification plate of the pump

Display	Menu level 1	Menu level 2	Description
ROTATION SENSE 0 Hz		ROTATION SENSE	Setting of the rotation sense. See the pump identification plate. Push on to start the pump (at 30hz) and check the rotation sense.
MIN SPEED 30 HZ		MIN SPEED	Define the minimum motor rotation speed
DRY RUN PROT NO		DRY RUN PROT	If the installation is provided with a level switch (flow switch or other ones) change NO by YES.
PRESSURE SETTING 2,0 BAR		PRESSURE SETTING	Working pressure setting in the installation
START DELTA P 0,3 BAR		Start delta P	Define the starting pressure as : starting pressure = setpoint pressure – start delta P.
TIME BEFORE STOP 5 S		TIME BEFORE STOP	Time setting before pump stop when there is no flow.
DISPLAY STANDARD		DISPLAY	Define the display mode : • STANDARD:network pressure (bar) + pressure setting (bar) • SERVICE : rotation frequency (Hz) + pressure setting (bar) + networkpressure (bar) + flow switch detection (1 or 0)
	HISTORIC		
RUNNING TIME HOURS 26H		RUNNING TIME	Total pump running hours (H).

Display	Menu level 1	Menu level 2	Description
PUMP CYCLES 30		PUMP CYCLES	Total number of pump cycles, one cycle includes one start and onr stop.
POWER ON 30		POWER ON	Number of Electronic-Control switching on
MAX PRESSURE 0,0 BAR		MAX PRESSURE	Storage of the maximum pressure reached in the installation (bar).
ALARM COUNT SHT CIRCUIT 15		ALARM COUNT SHT CIRCUIT	Total number of short circuits
ALARM COUNT OV CURRENT 10		ALARM COUNT OV CURRENT	Total number of over-currents
ALARM COUNT OVER T 5		ALARM COUNT OVER T	Total number of exceeding temperatures
ALARM COUNT DRY RUN 6		ALARM COUNT DRY RUN	Number of dry running

6.3.2 Manual mode

We can access to this mode via the push-button . The led is off.
This mode is fugitive and you shall keep pushing on the push-button to get it working.The pump starts at maximum frequency. When releasing it the pump slows down up to complete stop.

6.3.3 Automatic mode

This mode allows an automatic setting of the pressure whatever the flow is.
You can access to this mode by pushing on the push-button . The led is on.
The working condition of this mode can be set in the SETTINGS menu.

7 Installation and electrical connection

DANGER! Risk of death!
An improper installation and electrical connections can result in a risk of fatal injury.

- **The installation and electrical connections should only be done by a qualified electrician and in compliance with the regulations in force.**
- **Follow all accident prevention regulations!**
- **Before installation and electrical connection, switch off the product/station shall (no voltage) and be sure it cannot be switched on again without any control!**
- **Disconnect the mains plug!**

7.1 Installation

- Install the ElectronicControl in a room with easy access, normal ventilation and protection against frost and rain and very close to the pump.
- For any maintenance works enough space shall be provided around the installation. An easy access from at least both sides of the installation shall be ensured.

CAUTION! Risk of malfunction!
The ElectronicControl axis shall be correctly positioned in a vertical line.
The ElectronicControl shall be connected to the pump discharge pipes next after the check valve (Fig. 2). The piping diameter shall be the same or bigger than the one of the ElectronicControl. A complete tightness of the installation shall be ensured, in case of a leakage the system might run over a cycle and then be damaged. The installation piping shall not apply any stress on the ElectronicControl.

CAUTION! Risk of product and subsequent damages!
Do not put any foreign matters into the ElectronicControl when installating it (glue, treacle, chips ...),
The assembling of a check valve directly at the ElectronicControl suction (Fig. 2, Pos. 3) is mandatory to ensure a right operating of the ElectronicControl. A bladder tank over 2 liter volume (Fig. 2, Pos. 4) shall allow an optimal regulation of the pressure inside the installation. A pre-setting pressure 0.5 bars lower than the set point pressure is recommended.
A filter or a suction strainer shall be assembled to avoid any pumping of particles that might hinder the proper operating of the ElectronicControl.

7.2 Electrical connection

DANGER! Danger of electric shock!
The electrical connection shall only be carried out by an electrician approved by the local electricity supply company and according to the local regulations in force.

7.2.1 Electric connection of the ElectronicControl

The ElectronicControl shall be installed with cables provided by the manufacturer. If a cable is damaged, have it replaced by a qualified personnel.
The type of current and the network voltage shall comply with the characteristics of the ElectronicControl. See identification plate of the ElectronicControl.
It is recommended to install a 30 mA differential circuit breaker and a 16 A magneto-thermal protection.

DANGER! Danger of electric shock!
Do not forget the earth connection of the motor.
For the electric connection of the installation to the network the ElectronicControl plug shall be connected to the electric network.

7.2.2 Electric motor connection

The ElectronicControl shall be connected to the pump motor terminal according to the wiring diagrams Fig 5 or Fig 6.

7.2.3 Electric connection of a dry running protection

The ElectronicControl can be provided with an additional dry running protection such as dry contact (flow switch or others). See Fig. 7 for the connection.

8 Commissioning

CAUTION! Risk of health hazards!

Our ElectronicControl is tested in water. If any water remains inside it, for hygiene reasons it is recommended to rinse it before any use in the potable water network.

When switching on the ElectronicControl immediately carries out a diagnosis that lasts 10 seconds and will display the type and version. The led is on.

In case of a pump at suction, the priming of the pump shall be done manually (manual mode). During the priming step (see operating instruction of the pump) it may drive the pump at its maximum speed.

As soon as the pump is priming on, the ElectronicControl can be switched on Automatic mode.

9 Maintenance

Maintenance and repairs shall only be carried out by qualified personnel!

DANGER! Risk of death!

When working on electrical equipments, there is a risk of fatal injury due to electrical shocks.

Before any maintenance or repair works, switch off the unit/station (no voltage) and be sure it cannot be switched on again without any control. Generally only a qualified electrician is authorized to repair damaged connection cables.

Before a frost period it is necessary to drain the ElectronicControl.

Every 6 month check the right operating of the installation:

- the pressure of the bladder tank,
- the tightness of the connections and
- the proper closing of the valve.

10 Faults, causes and remedies

DANGER! Risk of death!
Only a specialised and qualified personnel is authorized to repair!
Observe the safety instructions (see chapter 9).

Fault	ElectronicControl behaviour	Remedies
E011 DRY RUN	The ElectronicControl starts the pump every 30 minutes over 24 hours. If dry running remains, it switches off the pump.	Check the hydraulic supply. If a set point pressure higher than the pressure the pump can deliver is programmed, the ElectronicControl will consider it as dry running.
E021 OVERLOAD	After the alarm detection the ElectronicControl will try 4 times to start the pump. After these 4 trials the pump is switched off.	Check that the rotor is not locked. Check the input data in the ElectronicControl. Check the state of the fuses..
E025 DISCONNECT MOTOR	Motor supply stop	Check the motor winding. Check the supply cables. Check the state of the 20A fuses (Fig. 4, Pos. 4).
E040 P SENSOR DEFFECT	The ElectronicControl stops.Q	Contact the technical service department:
E031 OVER T°	If the temperature is too high, the ElectronicControl stops and then the pump.	Check that the water temperature does not exceed 40°C. Check that the ambient temperature does not exceed 50°C.
E023 SHT CIRCUIT	After the alarm detection the ElectronicControl will try 4 times to start the pump. After these 4 trials the pump is switched off.	Check the motor. If the problem remains, contact the manufacturer.
E071 EEPROM	If the ElectronicControl detects a defect on its internal memory this error will be displayed.	Contact the technical service department:
E005 HIGH VOLTAGE	If the ElectronicControl detects an overvoltage, it stops over some seconds and then starts again.	Check the ElectronicControl supply voltage.

Fault	ElectronicControl behaviour	Remedies
E004 LOW VOLTAGE	If the ElectronicControl detects an under voltage, it stops over some seconds and then starts again.	Check the ElectronicControl supply voltage.
[WHITE SCREEN]		Check the ElectronicControl supply voltage. Check the 20A fuses (Fig. 4, Pos. 3).

If the fault cannot be remedied, please contact your nearest Wilo customer service point or representative.

11 Spare parts

Spare parts may be ordered via local professional technicians and/or the WILO customer service.
To avoid queries and order errors, please supply all data on the name plate with every order.

Subject to change without prior notice!

NL

EG-verklaring van overeenstemming

Hiermede verklaren wij dat dit aggregaat in de geleverde uitvoering voldoet aan de volgende bepalingen:

Elektromagnetische compatibiliteit 2004/108/EG

EG-laagspanningsrichtlijn 2006/95/EG

en overeenkomstige nationale wetgeving
gebruikte geharmoniseerde normen, in het bijzonder:
zie vorige pagina

I

Dichiarazione di conformità CE

Con la presente si dichiara che i presenti prodotti sono conformi alle seguenti disposizioni e direttive rilevanti:

Compatibilità elettromagnetica 2004/108/EG

Direttiva bassa tensione 2006/95/EG

e le normative nazionali vigenti
norme armonizzate applicate, in particolare:
vedi pagina precedente

E

Declaración de conformidad CE

Por la presente declaramos la conformidad del producto en su estado de suministro con las disposiciones pertinentes siguientes:

Directiva sobre compatibilidad electromagnética 2004/108/EG

Directiva sobre equipos de baja tensión 2006/95/EG

y la legislación nacional vigente
normas armonizadas adoptadas, especialmente:
véase página anterior

P

Declaração de Conformidade CE

Pela presente, declaramos que esta unidade no seu estado original, está conforme os seguintes requisitos:

Compatibilidade electromagnética 2004/108/EG

Directiva de baixa voltagem 2006/95/EG

e respectiva legislação nacional
normas harmonizadas aplicadas, especialmente:
ver página anterior

S

CE- försäkran

Härmed förklarar vi att denna maskin i levererar utförande motsvarar följande tillämpliga bestämmelser:

EG–Elektromagnetisk kompatibilitet – riktlinje 2004/108/EG

EG–Lågspänningsdirektiv 2006/95/EG

och gällande nationell lagstiftning
tillämpade harmoniserade normer, i synnerhet:
se föregående sida

N

EU-Overensstemmelseserklæring

Vi erklærer hermed at denne enheten i utførelse som levert er i overensstemmelse med følgende relevante bestemmelser:

EG–EMV–Elektromagnetisk kompatibilitet 2004/108/EG

EG–Lavspenningsdirektiv 2006/95/EG

og tilsvarende nasjonal lovgivning
anvendte harmoniserte standarder, særlig:
se forrige side

FIN

CE-standardinmukaisuusseloste

Ilmoitamme täten, että tämä laite vastaa seuraavia asiaankuuluvia määräyksiä:

Sähkömagneettinen soveltuvuus 2004/108/EG

Matalajännite direktiivit: 2006/95/EG

ja vastaavaa kansallista lainsäädäntöä
käytetyt yhteensovitetut standardit, erityisesti:
katso edellinen sivu.

DK

EF-overensstemmelseserklæring

Vi erklærer hermed, at denne enhed ved levering overholder følgende relevante bestemmelser:

Elektromagnetisk kompatibilitet: 2004/108/EG

Lavvolts-direktiv 2006/95/EG

og gældende national lovgivning
anvendte harmoniserede standarder, særligt:
se forrige side

H

EK-megfelelőségi nyilatkozat

Ezennel kijelentjük, hogy az berendezés megfelel az alábbi irányelveknek:

Elektromágneses összeférhetőség irányelv: 2004/108/EK

Kisfeszültségű berendezések irányelv: 2006/95/EK

valamint a vonatkozó nemzeti törvényeknek és
alkalmazott harmonizált szabványoknak, különösen:
lásd az előző oldalt

CZ

Prohlášení o shodě ES

Prohlašujeme tímto, že tento agregát v dodaném provedení odpovídá následujícím příslušným ustanovením:

Směrnice o elektromagnetické kompatibilitě 2004/108/ES

Směrnice pro nízké napětí 2006/95/ES

a příslušným národním předpisům
použité harmonizační normy, zejména:
viz předchozí strana

PL

Deklaracja Zgodności WE

Niniejszym deklarujemy z pełną odpowiedzialnością, że dostarczony wyrób jest zgodny z następującymi dokumentami:

dyrektywą dot. kompatybilności elektromagnetycznej 2004/108/WE

dyrektywą niskonapięciową 2006/95/WE

oraz odpowiednimi przepisami ustawodawstwa krajowego
stosowanymi normami zharmonizowanymi, a w szczególności:
patrz poprzednia strona

RUS

Декларация о соответствии Европейским нормам

Настоящим документом заявляем, что данный агрегат в его объеме поставки соответствует следующим нормативным документам:

Электромагнитная устойчивость 2004/108/EG

Директивы по низковольтному напряжению 2006/95/EG

в соответствии с национальным законодательством
Используемые согласованные стандарты и нормы, в частности:
см. предыдущую страницу

GR

Δήλωση συμμόρφωσης της ΕΕ

Δηλώνουμε ότι το προϊόν αυτό σ' αυτή την κατάσταση παράδοσης ικανοποιεί τις ακόλουθες διατάξεις :

Ηλεκτρομαγνητική συμβατότητα ΕΚ-2004/108/ΕΚ

Οδηγία χαμηλής τάσης ΕΚ–2006/95/ΕΚ

καθώς και την αντίστοιχη κρατική νομοθεσία
Εναρμονισμένα χρησιμοποιούμενα πρότυπα, ιδιαίτερα:
Βλέπε προηγούμενη σελίδα

TR

CE Uygunluk Teyid Belgesi

Bu cihazın teslim edildiği şekliyle aşağıdaki standartlara uygun olduğunu teyid ederiz:

Elektromanyetik Uyumluluk 2004/108/EG

Alçak gerilim yönetmeliği 2006/95/EG

ve söz konusu ulusal yasalara.
kısmen kullanılan standartlar için:
bkz. bir önceki sayfa

RO

EC-Declarație de conformitate

Prin prezenta declarăm că acest produs aşa cum este livrat, corespunde cu următoarele prevederi aplicabile:

Compatibilitatea electromagnetică – directiva 2004/108/EG

Directiva privind tensiunea joasă 2006/95/EG

şi legislaţia naţională respectivă
standarde armonizate aplicate, îndeosebi:
vezi pagina precedentă

EST

EÜ vastavusdeklaratsioon

Käesolevaga tõendame, et see toode vastab järgmistele asjakohastele direktiividele:

Elektromagnetilise ühilduvuse direktiiv 2004/108/EÜ

Madalpinge direktiiv 2006/95/EÜ

ja vastavalt asjaomastele siseriiklikele õigusaktidele
kohaldatud harmoneeritud standardid, eriti:
vt eelmist lk

LV

EC – atbilstības deklarācija

Ar šo mēs apliecinām, ka šis izstrādājums atbilst sekojošiem noteikumiem:

Elektromagnētiskās savietojamības direktīva 2004/108/EK

Zemsprieguma direktīva 2006/95/EK

un atbilstošai nacionālajai likumdošanai
piemēroti harmonizēti standarti, tai skaitā:
skatīt iepriekšējo lappusi

LT

EB atitikties deklaracija

Šiuo pažymima, kad šis gaminys atitinka šias normas ir direktyvas:

Elektromagnetinio suderinamumo direktyvą 2004/108/EB

Žemos įtampos direktyvą 2006/95/EB

bei atitinkamamiems šalies įstatymams
pritaikytus vieningus standartus, o būtent:
žr. ankstesniame puslapyje

SK

ES vyhlásenie o zhode

Týmto vyhlasujeme, že konštrukcie tejto konštrukčnej série v dodanom vyhotovení vyhovujú nasledujúcim príslušným ustanoveniam:

Elektromagnetická zhoda – smernica 2004/108/ES

Nízkonapäťové zariadenia – smernica 2006/95/ES

a zodpovedajúca vnútroštátna legislatíva
používané harmonizované normy, najmä:
pozri predchádzajúcu stranu

SLO

ES – izjava o skladnosti

Izjavljamo, da dobavljene vrste izvedbe te serije ustrezajo sledečim zadevnim določilom:

Direktiva o elektromagnetni združljivosti 2004/108/ES

Direktiva o nizki napetosti 2006/95/ES

in ustrezno nacionalnim zakonom
uporabljeni harmonizirani standardi, predvsem:
glejte prejšnjo stran

BG

ЕО-Декларация за съответствие

Декларираме, че продуктът отговаря на следните изисквания:

Електромагнитна съвместимост – директива 2004/108/ЕО

Директива ниско напрежение 2006/95/ЕО

и съответното национално законодателство
Хармонизирани стандарти:
вж. предната страница

M

Dikjarazzjoni ta' konformità KE

B'dan il-mezz, niddikjaraw li l-prodotti tas-serje jissodisfaw id-dispożizzjonijiet relevanti li ġejjin:

Kompatibbiltà elettromanjetika – Direttiva 2004/108/KE

Vultaġġ baxx – Direttiva 2006/95/KE

kif ukoll standards armonizzati adottati fil-leġiżlazzjoni nazzjonali
b'mod partikolari:
ara l-paġna ta' qabel

WILO SE
Nortkirchenstraße 100
44263 Dortmund
Germany

WILO SE
Nortkirchenstraße 100
44263 Dortmund
Germany
T +49 231 4102-0
F +49 231 4102-7363
wilo@wilo.com
www.wilo.com

Wilo – International (Subsidiaries)

Argentina
WILO SALMSON
Argentina S.A.
C1295ABI Ciudad
Autónoma de Buenos
Aires
T+ 54 11 4361 5929
info@salmson.com.ar

Austria
WILO Pumpen
Österreich GmbH
2351 Wiener Neudorf
T +43 507 507-0
office@wilo.at

Azerbaijan
WILO Caspian LLC
1014 Baku
T +994 12 5962372
info@wilo.az

Belarus
WILO Bel OOO
220035 Minsk
T +375 17 2535363
wilo@wilo.by

Belgium
WILO SA/NV
1083 Ganshoren
T +32 2 4823333
info@wilo.be

Bulgaria
WILO Bulgaria Ltd.
1125 Sofia
T +359 2 9701970
info@wilo.bg

Canada
WILO Canada Inc.
Calgary, Alberta T2A 5L4
T +1 403 2769456
bill.lowe@wilo-na.com

China
WILO China Ltd.
101300 Beijing
T +86 10 58041888
wilobj@wilo.com.cn

Croatia
WILO Hrvatska d.o.o.
10090 Zagreb
T +38 51 3430914
wilo-hrvatska@wilo.hr

Czech Republic
WILO Praha s.r.o.
25101 Cestlice
T +420 234 098711
info@wilo.cz

Denmark
WILO Danmark A/S
2690 Karlslunde
T +45 70 253312
wilo@wilo.dk

Estonia
WILO Eesti OÜ
12618 Tallinn
T +372 6 509780
info@wilo.ee

Finland
WILO Finland OY
02330 Espoo
T +358 207401540
wilo@wilo.fi

France
WILO S.A.S.
78390 Bois d'Arcy
T +33 1 30050930
info@wilo.fr

Great Britain
WILO (U.K.) Ltd.
DE14 2WJ Burton-
Upon-Trent
T +44 1283 523000
sales@wilo.co.uk

Greece
WILO Hellas AG
14569 Anixi (Attika)
T +302 10 6248300
wilo.info@wilo.gr

Hungary
WILO Magyarország Kft
2045 Törökbálint
(Budapest)
T +36 23 889500
wilo@wilo.hu

India
WILO India Mather and
Platt Pumps Ltd.
Pune 411019
T +91 20 27442100
service@
pun.matherplatt.co.in

Indonesia
WILO Pumps Indonesia
Jakarta Selatan 12140
T +62 21 7247676
citrawilo@cbn.net.id

Ireland
WILO Engineering Ltd.
Limerick
T +353 61 227566
sales@wilo.ie

Italy
WILO Italia s.r.l.
20068 Peschiera
Borromeo (Milano)
T +39 25538351
wilo.italia@wilo.it

Kazakhstan
WILO Central Asia
050002 Almaty
T +7 727 2785961
info@wilo.kz

Korea
WILO Pumps Ltd.
621-807 Gimhae
Gyeongnam
T +82 55 3405890
wilo@wilo.co.kr

Latvia
WILO Baltic SIA
1019 Riga
T +371 7 145229
mail@wilo.lv

Lebanon
WILO SALMSON
Lebanon
12022030 El Metn
T +961 4 722280
wsl@cyberia.net.lb

Lithuania
WILO Lietuva UAB
03202 Vilnius
T +370 5 2136495
mail@wilo.lt

The Netherlands
WILO Nederland b.v.
1551 NA Westzaan
T +31 88 9456 000
info@wilo.nl

Norway
WILO Norge AS
0975 Oslo
T +47 22 804570
wilo@wilo.no

Poland
WILO Polska Sp. z.o.o.
05-090 Raszyn
T +48 22 7026161
wilo@wilo.pl

Portugal
Bombas Wilo-Salmson
Portugal Lda.
4050-040 Porto
T +351 22 2080350
bombas@wilo.pt

Romania
WILO Romania s.r.l.
077040 Com. Chiajna
Jud. Ilfov
T +40 21 3170164
wilo@wilo.ro

Russia
WILO Rus ooo
123592 Moscow
T +7 495 7810690
wilo@wilo.ru

Saudi Arabia
WILO ME - Riyadh
Riyadh 11465
T +966 1 4624430
wshoula@wataniaind.com

Serbia and Montenegro
WILO Beograd d.o.o.
11000 Beograd
T +381 11 2851278
office@wilo.co.yu

Slovakia
WILO Slovakia s.r.o.
83106 Bratislava
T +421 2 33014511
wilo@wilo.sk

Slovenia
WILO Adriatic d.o.o.
1000 Ljubljana
T +386 1 5838130
wilo.adriatic@wilo.si

South Africa
Salmson South Africa
1610 Edenvale
T +27 11 6082780
errol.cornelius@
salmson.co.za

Spain
WILO Ibérica S.A.
28806 Alcalá de
Henares (Madrid)
T +34 91 8797100
wilo.iberica@wilo.es

Sweden
WILO Sverige AB
35246 Växjö
T +46 470 727600
wilo@wilo.se

Switzerland
EMB Pumpen AG
4310 Rheinfelden
T +41 61 83680-20
info@emb-pumpen.ch

Taiwan
WILO-EMU Taiwan Co.
Ltd.
110 Taipeh
T +886 227 391655
nelson.wu@
wiloemutaiwan.com.tw

Turkey
WILO Pompa Sistemleri
San. ve Tic. A.Ş.
34888 Istanbul
T +90 216 6610211
wilo@wilo.com.tr

Ukraina
WILO Ukraina t.o.w.
01033 Kiew
T +38 044 2011870
wilo@wilo.ua

United Arab Emirates
WILO Middle East FZE
Jebel Ali Free Zone –
South – Dubai
T +971 4 880 91 77
info@wilo.ae

USA
WILO USA LLC
1290 N 25th Ave
Melrose Park, Illinois
60160
T +1 866 945 6872
info@wilo-usa.com

Vietnam
WILO Vietnam Co Ltd.
Ho Chi Minh City,
Vietnam
T +84 8 38109975
nkminh@wilo.vn

Wilo – International (Representation offices)

Algeria
Bad Ezzouar, Dar El Beida
T +213 21 247979
chabane.hamdad@
salmson.fr

Armenia
0001 Yerevan
T +374 10 544336
info@wilo.am

Bosnia and Herzegovina
71000 Sarajevo
T +387 33 714510
zeljko.cvjetkovic@
wilo.ba

Georgia
0179 Tbilisi
T +995 32 306375
info@wilo.ge

Macedonia
1000 Skopje
T +389 2 3122058
valerij.vojneski@wilo.c
om.mk

Mexico
07300 Mexico
T +52 55 55863209
roberto.valenzuela@wi
lo.com.mx

Moldova
2012 Chisinau
T +373 22 223501
sergiu.zagurean@
wilo.md

Rep. Mongolia
Ulaanbaatar
T +976 11 314843
wilo@magicnet.mn

Tajikistan
734025 Dushanbe
T +992 37 2312354
info@wilo.tj

Turkmenistan
744000 Ashgabad
T +993 12 345838
kerim.kertiyev@wilo-
tm.info

Uzbekistan
100015 Tashkent
T +998 71 1206774
info@wilo.uz

March 2011