Submittal Data Sheet

In-line Centrifugal Pumps

Wilo-IL 1.25-25 - 1.25-50 (4 Pole)

Project:	
Engineer:	
Contractor:	
Submitted By:	Date:
Approved By:	Date:

Tag #	Model #	Flow	Head	HP	Cycle	Phase	Voltage	RPM
					60Hz			1750

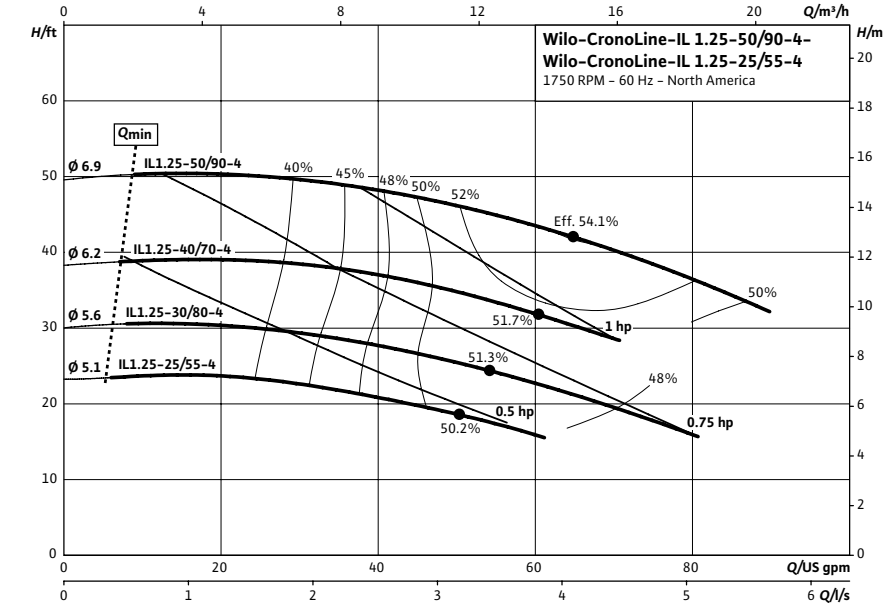

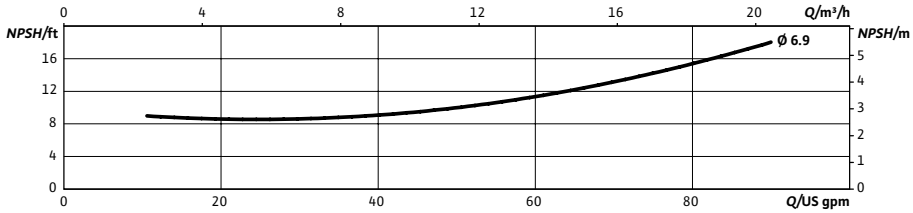

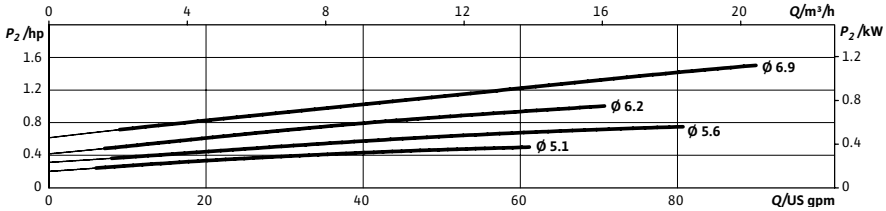

Product Info

Brand	Wilo
Product Description	IL 1.25-25 - IL 1.25-50

Construction Materials

Pump Volute	Cast Iron EN-GJL-250
Impeller	Bronze (cast iron optional)
Shaft	316L stainless steel
Mechanical Seal	Q1Q1X4GG (silicium carbide seal faces, HNBR elastomers)

Motor Data

Power Supply	1~115/208-230 volt 3~208-230/460, 575 volt
Integrated full motor protection	integrated protection PTC/PTO on request (on-site trip unit required)
Protection Class	TEF (ODP on request)
Insulation Class	F

Hydraulic Data

Flange Connection	1 ¼" 125# ANSI compatible with ¼" pressure gauge tappings
Max Operating Pressure	175 PSI (12 bar)
Min. Fluid Temp	-5°F (-20 °C)
Max Fluid Temp	285°F (140 °C)
Max. Ambient Temp	104°F (40 °C)

Application

- Hot water heating systems
- Air conditioning systems
- Closed cooling circuits
- Industrial circulation systems
- Solar Systems
- Geothermal Systems

Approval Stamp

Dimensions & Weights

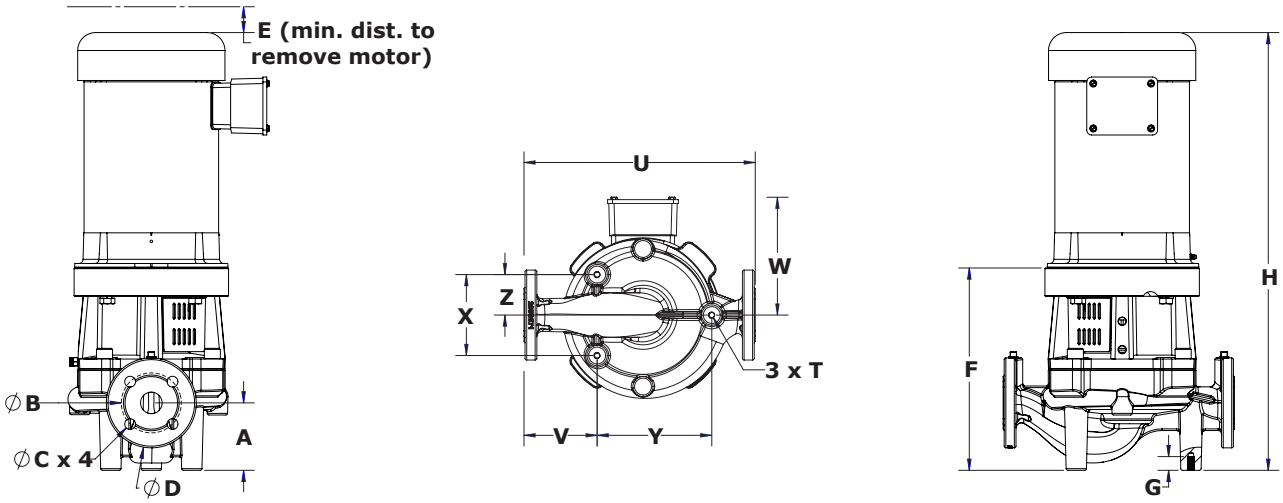

Dimensions and Weights

		Voltage		P2	Phase								Dimensions (in)							Weight
Model	**PEI**	**[V]**	**Motor**	**[HP]**	**[~]**	**Dia**	**A**	**E**	**F**	**G**	**H**	**T**	**U**	**V**	**W**	**X**	**Y**	**Z**	**lbs**
IL 1.25 25/55-4		115/230	TEFC	½	1	1.25	3.94	2.3	10.61	0.79	19.89	3/8"-16	13.5	4.27	5.18	4.72	6.69	2.36	92
		115/230	ODP	½	1	1.25	3.94	2.3	10.61	0.79	19.89	3/8"-16	13.5	4.27	4.17	4.72	6.69	2.36	92
		208/230-460	TEFC	½	1	1.25	3.94	2.3	10.61	0.79	20.77	3/8"-16	13.5	4.27	5.72	4.72	6.69	2.36	96
		208/230-460	ODP	½	1	1.25	3.94	2.3	10.61	0.79	21.24	3/8"-16	13.5	4.27	5.04	4.72	6.69	2.36	96
		575	TEFC	½	1	1.25	3.94	2.3	10.61	0.79	19.89	3/8"-16	13.5	4.27	5.13	4.72	6.69	2.36	87
		575	ODP	½	1	1.25	3.94	2.31	10.61	0.79	19.26	3/8"-16	13.5	4.27	3.32	4.72	6.69	2.36	86
IL 1.25 30/80-4		115/230	TEFC	¾	1	1.25	3.94	2.3	10.61	0.79	21.02	3/8"-16	13.5	4.27	5.18	4.72	6.69	2.36	98
		115/230	ODP	¾	1	1.25	3.94	2.3	10.61	0.79	20.44	3/8"-16	13.5	4.27	4.65	4.72	6.69	2.36	99
		208/230-460	TEFC	¾	1	1.25	3.94	2.3	10.61	0.79	19.89	3/8"-16	13.5	4.27	5.13	4.72	6.69	2.36	91
		208/230-460	ODP	¾	1	1.25	3.94	2.3	10.61	0.79	20.77	3/8"-16	13.5	4.27	5.54	4.72	6.69	2.36	97
		575	TEFC	¾	1	1.25	3.94	2.3	10.61	0.79	19.89	3/8"-16	13.5	4.27	5.18	4.72	6.69	2.36	91
		575	ODP	¾	1	1.25	3.94	2.31	10.61	0.79	19.65	3/8"-16	13.5	4.27	3.32	4.72	6.69	2.36	89
IL 1.25 40/70-4		115/230	TEFC	1	1	1.25	3.94	2.31	10.61	0.79	21.77	3/8"-16	13.5	4.27	5.71	4.72	6.69	2.36	105
		115/230	ODP	1	1	1.25	3.94	2.31	10.61	0.79	21.22	3/8"-16	13.5	4.27	4.65	4.72	6.69	2.36	105
	0.98	208/230-460	TEFC	1	3	1.25	3.94	2.31	10.61	0.79	20.77	3/8"-16	13.5	4.27	5.72	4.72	6.69	2.36	101
		208/230-460	ODP	1	3	1.25	3.94	2.31	10.61	0.79	20.77	3/8"-16	13.5	4.27	5.54	4.72	6.69	2.36	102
		575	TEFC	1	3	1.25	3.94	2.31	10.61	0.79	20.77	3/8"-16	13.5	4.27	5.71	4.72	6.69	2.36	100
		575	ODP	1	3	1.25	3.94	2.31	10.61	0.79	20.04	3/8"-16	13.5	4.27	3.32	4.72	6.69	2.36	91
IL 1.25 50/90-4		115/230	TEFC	1½	1	1.25	3.94	2.31	10.61	0.79	22.65	3/8"-16	13.5	4.27	5.75	4.72	6.69	2.36	113
		115/230	ODP	1½	1	1.25	3.94	2.31	10.61	0.79	21.62	3/8"-16	13.5	4.27	4.65	4.72	6.69	2.36	113
	0.98	208/230-460	TEFC	1½	3	1.25	3.94	2.31	10.61	0.79	21.77	3/8"-16	13.5	4.27	5.72	4.72	6.69	2.36	107
		208/230-460	ODP	1½	3	1.25	3.94	2.31	10.61	0.79	21.27	3/8"-16	13.5	4.27	5.88	4.72	6.69	2.36	102
		575	TEFC	1½	3	1.25	3.94	2.31	10.61	0.79	22.65	3/8"-16	13.5	4.27	5.71	4.72	6.69	2.36	115
		575	ODP	1½	3	1.25	3.94	2.31	10.61	0.79	21.27	3/8"-16	13.5	4.27	5.88	4.72	6.69	2.36	102

Flange Dimensions

Dimensions - Inches		
ØB	**ØC x 4**	**ØD**
3.5	0.63 x 4	5.25

Submittal Data Sheet

In-line Centrifugal Pumps

Wilo-IL 1.5-25 - 1.5-50 (4 Pole)

Project:	
Engineer:	
Contractor:	
Submitted By:	Date:
Approved By:	Date:

Tag #	Model #	Flow	Head	HP	Cycle	Phase	Voltage	RPM
					60Hz			1750

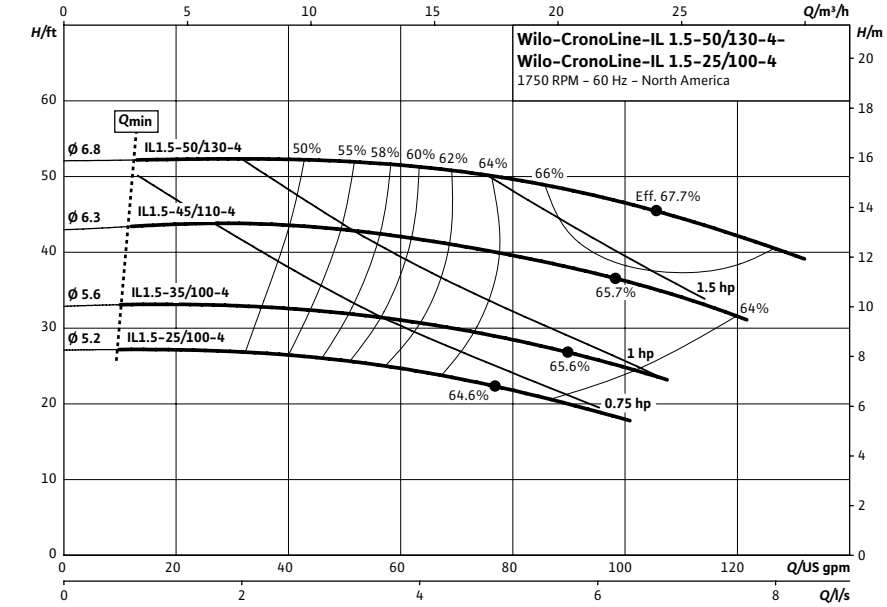

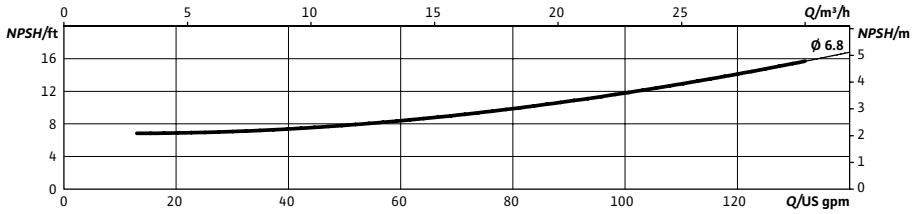

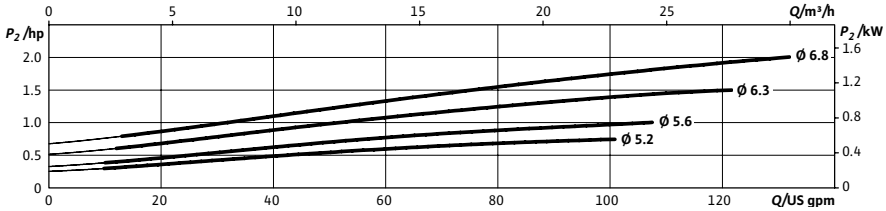

Product Info

Brand	Wilo
Product Description	IL 1.5-25 - IL 1.5-50

Construction Materials

Pump Volute	Cast Iron EN-GJL-250
Impeller	Bronze (cast iron optional)
Shaft	316L stainless steel
Mechanical Seal	Q1Q1X4GG (silicium carbide seal faces, HNBR elastomers)

Motor Data

Power Supply	1~115/208-230 volt 3~208-230/460, 575 volt
Integrated full motor protection	integrated protection PTC/PTO on request (on-site trip unit required)
Protection Class	TEF (ODP on request)
Insulation Class	F

Hydraulic Data

Flange Connection	1 1/2" 125# ANSI compatible with ¼" pressure gauge tappings
Max Operating Pressure	175 PSI (12 bar)
Min. Fluid Temp	-5°F (-20 °C)
Max Fluid Temp	285°F (140 °C)
Max. Ambient Temp	104°F (40 °C)

Application

- Hot water heating systems
- Air conditioning systems
- Closed cooling circuits
- Industrial circulation systems
- Solar Systems
- Geothermal Systems

Approval Stamp

Dimensions & Weights

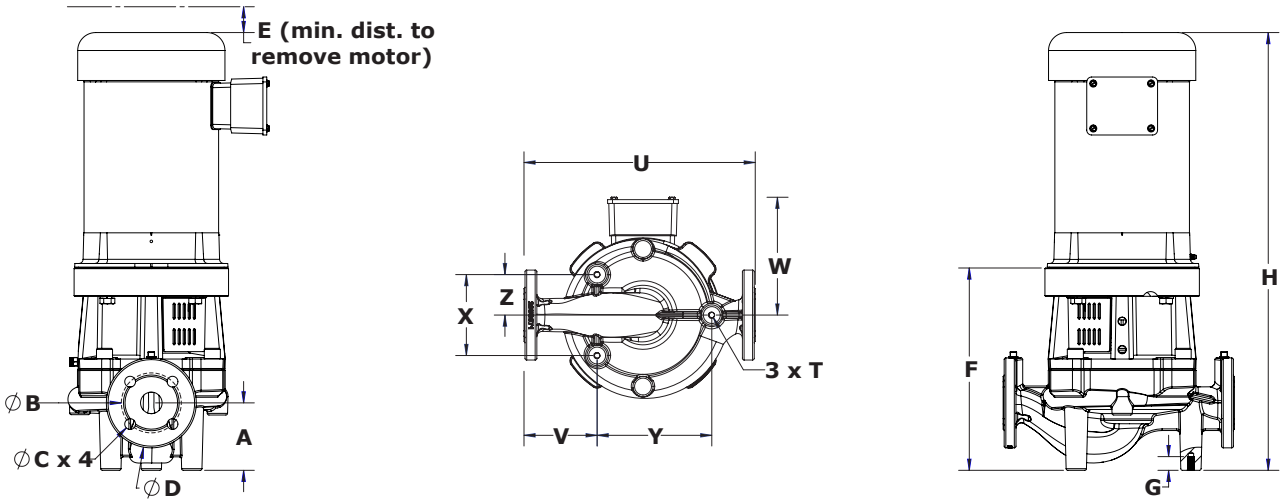

Dimensions and Weights

		Voltage		P2	Phase								Dimensions (in)							Weight
Model	**PEI**	**[V]**	**Motor**	**[HP]**	**[~]**	**Dia**	**A**	**E**	**F**	**G**	**H**	**T**	**U**	**V**	**W**	**X**	**Y**	**Z**	**lbs**
IL 1.5 25/100-4		115/230	TEFC	¾	1	1.50	3.23	2.3	10.45	0.79	20.86	3/8"-16	14.5	5.22	5.18	5.12	8.15	2.56	103
		115/230	ODP	¾	1	1.50	3.23	2.3	10.45	0.79	20.28	3/8"-16	14.5	5.22	4.65	5.12	8.15	2.56	104
		208/230-460	TEFC	¾	3	1.50	3.23	2.3	10.45	0.79	19.73	3/8"-16	14.5	5.22	5.18	5.12	8.15	2.56	96
		208/230-460	ODP	¾	3	1.50	3.23	2.3	10.45	0.79	20.61	3/8"-16	14.5	5.22	5.62	5.12	8.15	2.56	102
		575	TEFC	¾	3	1.50	3.23	2.3	10.45	0.79	19.73	3/8"-16	14.5	5.22	5.18	5.12	8.15	2.56	96
		575	ODP	¾	3	1.50	3.23	2.31	10.45	0.79	19.49	3/8"-16	14.5	5.22	3.32	5.12	8.15	2.56	94
IL 1.5 35/100-4		115/230	TEFC	1	1	1.50	3.23	2.31	10.45	0.79	21.61	3/8"-16	14.5	5.22	5.71	5.12	8.15	2.56	110
		115/230	ODP	1	1	1.50	3.23	2.31	10.45	0.79	21.07	3/8"-16	14.5	5.22	4.65	5.12	8.15	2.56	110
	0.92	208/230-460	TEFC	1	3	1.50	3.23	2.31	10.45	0.79	20.61	3/8"-16	14.5	5.22	5.72	5.12	8.15	2.56	106
		208/230-460	ODP	1	3	1.50	3.23	2.31	10.45	0.79	20.61	3/8"-16	14.5	5.22	5.54	5.12	8.15	2.56	107
		575	TEFC	1	3	1.50	3.23	2.31	10.45	0.79	20.61	3/8"-16	14.5	5.22	5.71	5.12	8.15	2.56	105
		575	ODP	1	3	1.50	3.23	2.31	10.45	0.79	19.89	3/8"-16	14.5	5.22	3.32	5.12	8.15	2.56	96
IL 1.5 45/110-4		115/230	TEFC	1½	1	1.50	3.23	2.31	10.45	0.79	22.49	3/8"-16	14.5	5.22	5.75	5.12	8.15	2.56	118
	0.92	115/230	ODP	1½	1	1.50	3.23	2.31	10.45	0.79	21.46	3/8"-16	14.5	5.22	4.65	5.12	8.15	2.56	118
		208/230-460	TEFC	1½	3	1.50	3.23	2.31	10.45	0.79	21.61	3/8"-16	14.5	5.22	5.72	5.12	8.15	2.56	112
		208/230-460	ODP	1½	3	1.50	3.23	2.31	10.45	0.79	21.11	3/8"-16	14.5	5.22	5.88	5.12	8.15	2.56	107
		575	TEFC	1½	3	1.50	3.23	2.31	10.45	0.79	22.49	3/8"-16	14.5	5.22	5.71	5.12	8.15	2.56	120
		575	ODP	1½	3	1.50	3.23	2.31	10.45	0.79	21.11	3/8"-16	14.5	5.22	5.88	5.12	8.15	2.56	107
IL 1.5 50/130-4		115/230	TEFC	2	1	1.50	3.23	2.4	10.45	0.79	24.26	3/8"-16	14.5	5.22	5.88	5.12	8.15	2.56	122
	0.92	115/230	ODP	2	1	1.50	3.23	2.4	10.45	0.79	22.49	3/8"-16	14.5	5.22	5.56	5.12	8.15	2.56	120
		208/230-460	TEFC	2	3	1.50	3.23	2.4	10.45	0.79	21.61	3/8"-16	14.5	5.22	5.74	5.12	8.15	2.56	118
		208/230-460	ODP	2	3	1.50	3.23	2.4	10.45	0.79	21.57	3/8"-16	14.5	5.22	5.62	5.12	8.15	2.56	114
		575	TEFC	2	3	1.50	3.23	2.4	10.45	0.79	21.61	3/8"-16	14.5	5.22	5.74	5.12	8.15	2.56	117
		575	ODP	2	3	1.50	3.23	2.4	10.45	0.79	20.65	3/8"-16	14.5	5.22	5.88	5.12	8.15	2.56	111

Flange Dimensions

Dimensions - Inches		
ØB	**ØC x 4**	**ØD**
3.9	0.63 x 4	6.12

Submittal Data Sheet

In-line Centrifugal Pumps

Wilo-IL 1.5-55 - 1.5-85 (4 Pole)

Project:	
Engineer:	
Contractor:	
Submitted By:	Date:
Approved By:	Date:

Tag #	Model #	Flow	Head	HP	Cycle	Phase	Voltage	RPM
					60Hz			1750

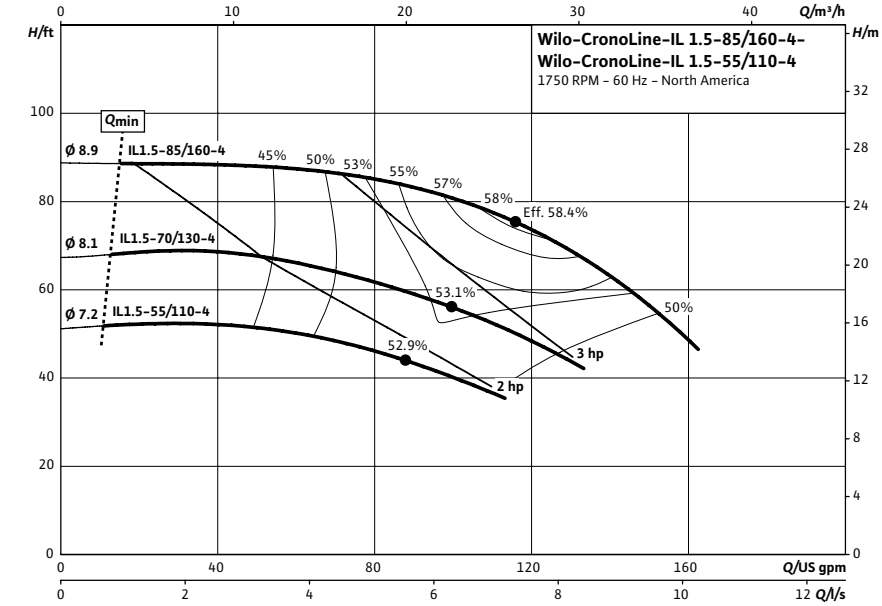

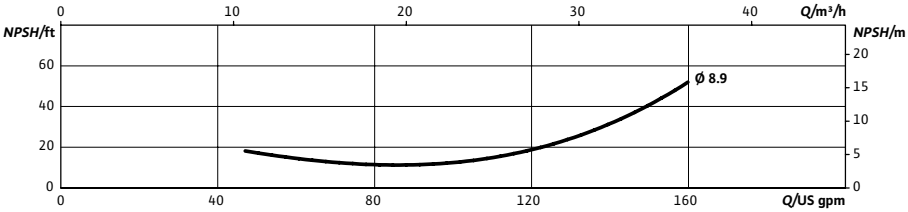

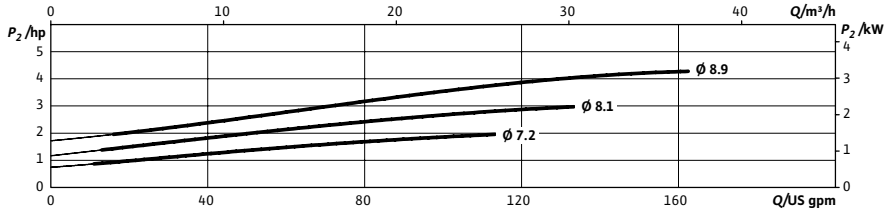

Product Info

Brand	Wilo
Product Description	IL 1.5-55 - IL 1.5-85

Construction Materials

Pump Volute	Cast Iron EN-GJL-250
Impeller	Bronze (cast iron optional)
Shaft	316L stainless steel
Mechanical Seal	Q1Q1X4GG (silicium carbide seal faces, HNBR elastomers)

Motor Data

Power Supply	1~115/208-230 volt 3~208-230/460, 575 volt
Integrated full motor protection	integrated protection PTC/PTO on request (on-site trip unit required)
Protection Class	TEF (ODP on request)
Insulation Class	F

Hydraulic Data

Flange Connection	1 1/2" 125# ANSI compatible with ¼" pressure gauge tappings
Max Operating Pressure	175 PSI (12 bar)
Min. Fluid Temp	-5°F (-20 °C)
Max Fluid Temp	285°F (140 °C)
Max. Ambient Temp	104°F (40 °C)

Application

- Hot water heating systems
- Air conditioning systems
- Closed cooling circuits
- Industrial circulation systems
- Solar Systems
- Geothermal Systems

Approval Stamp

Dimensions & Weights

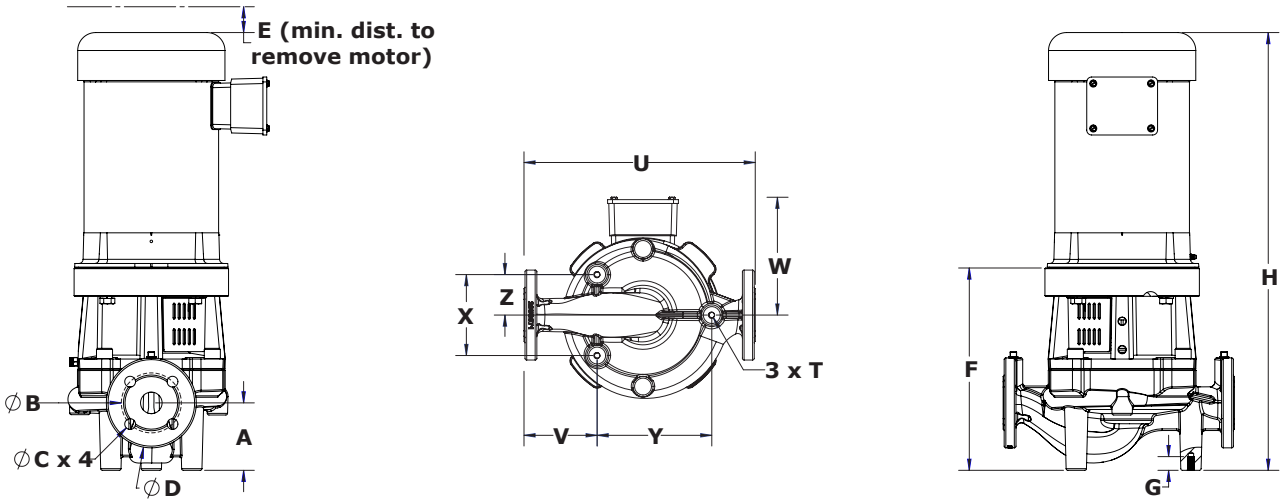

Dimensions and Weights

		Voltage		P2	Phase	Dimensions (in)													Weight
Model	**PEI**	**[V]**	**Motor**	**[HP]**	**[~]**	**Dia**	**A**	**E**	**F**	**G**	**H**	**T**	**U**	**V**	**W**	**X**	**Y**	**Z**	**lbs**
IL 1.5 55/110-4	0.92	115/230	TEFC	2	1	1.50	4.33	2.38	11.38	0.79	25.19	3/8"-16	17	5.94	5.88	7.09	8.46	3.54	142
		115/230	ODP	2	1	1.50	4.33	2.37	11.38	0.79	23.41	3/8"-16	17	5.94	5.56	7.09	8.46	3.54	140
	0.95	208/230-460	TEFC	2	3	1.50	4.33	2.37	11.38	0.79	22.54	3/8"-16	17	5.94	5.74	7.09	8.46	3.54	138
		208/230-460	ODP	2	3	1.50	4.33	2.37	11.38	0.79	22.5	3/8"-16	17	5.94	5.62	7.09	8.46	3.54	134
		575	TEFC	2	3	1.50	4.33	2.37	11.38	0.79	22.54	3/8"-16	17	5.94	5.74	7.09	8.46	3.54	137
		575	ODP	2	3	1.50	4.33	2.37	11.38	0.79	21.58	3/8"-16	17	5.94	5.89	7.09	8.46	3.54	131
IL 1.5 70/130-4		115	TEFC	3	1	1.50	4.33	2.87	12.57	0.79	26.3	3/8"-16	17	5.94	6.87	7.09	8.46	3.54	177
		115	ODP	3	1	1.50	4.33	2.87	12.57	0.79	26.3	3/8"-16	17	5.94	6.75	7.09	8.46	3.54	176
	0.95	208/230-460	TEFC	3	3	1.50	4.33	2.87	12.57	0.79	26.32	3/8"-16	17	5.94	6.87	7.09	8.46	3.54	171
		208/230-460	ODP	3	3	1.50	4.33	2.87	12.57	0.79	26.32	3/8"-16	17	5.94	6.75	7.09	8.46	3.54	172
		575	TEFC	3	3	1.50	4.33	2.87	12.57	0.79	26.32	3/8"-16	17	5.94	6.87	7.09	8.46	3.54	169
		575	ODP	3	2	1.50	4.33	2.87	12.57	0.79	24.9	3/8"-16	17	5.94	6.7	7.09	8.46	3.54	174
IL 1.5 85/160-4	0.95	208/230-460	TEFC	5	3	1.50	4.33	2.9	12.57	0.79	27.82	3/8"-16	17	5.94	6.87	7.09	8.46	3.54	186
		208/230-460	ODP	5	3	1.50	4.33	2.9	12.57	0.79	26.32	3/8"-16	17	5.94	6.75	7.09	8.46	3.54	190
		575	TEFC	5	3	1.50	4.33	2.9	12.57	0.79	27.82	3/8"-16	17	5.94	6.87	7.09	8.46	3.54	186
		575	ODP	5	3	1.50	4.33	2.87	12.57	0.79	26.08	3/8"-16	17	5.94	6.7	7.09	8.46	3.54	189

Flange Dimensions

Dimensions - Inches		
ØB	**ØC x 4**	**ØD**
3.9	0.63 x 4	6.12

Submittal Data Sheet

In-line Centrifugal Pumps

Wilo-IL 2-20 - 2-45 (4 Pole)

Project:	
Engineer:	
Contractor:	
Submitted By:	Date:
Approved By:	Date:

Tag #	Model #	Flow	Head	HP	Cycle	Phase	Voltage	RPM
					60Hz			1750

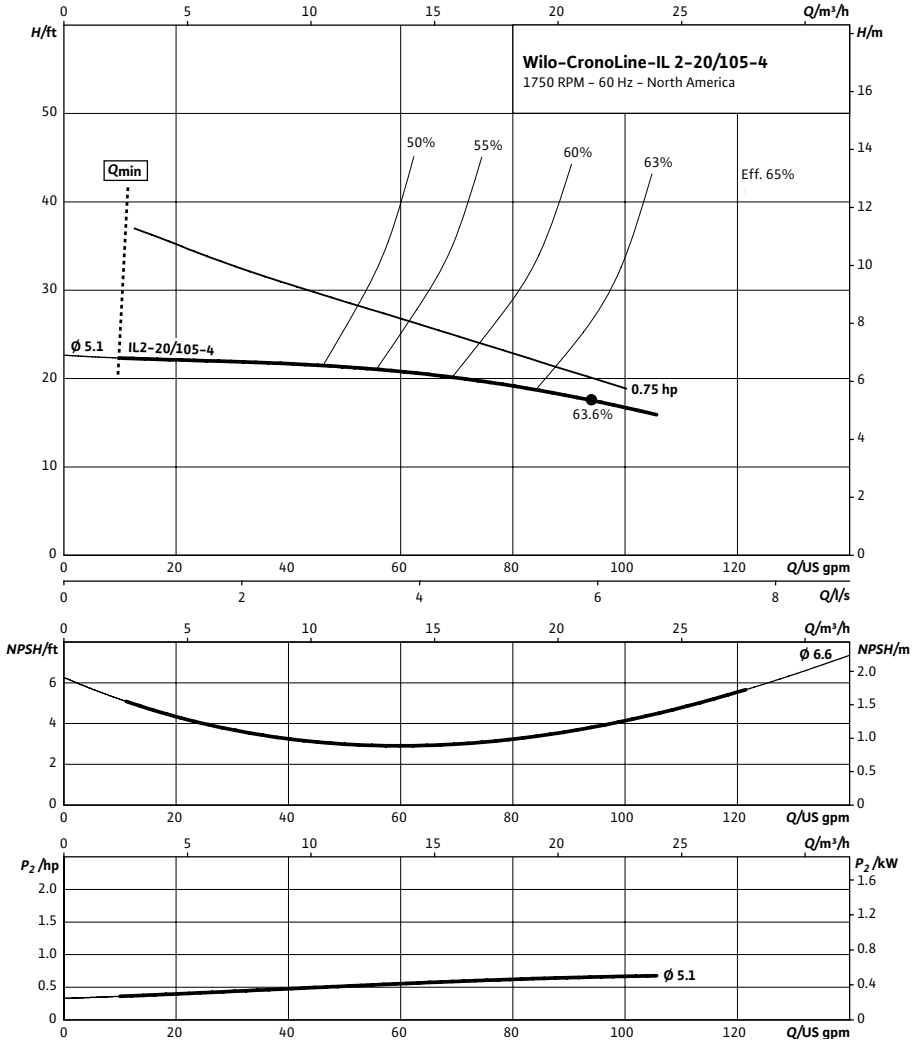

Product Info

Brand	Wilo
Product Description	IL 2-20

Construction Materials

Pump Volute	Cast Iron EN-GJL-250
Impeller	Bronze (cast iron optional)
Shaft	316L stainless steel
Mechanical Seal	Q1Q1X4GG (silicium carbide seal faces, HNBR elastomers)

Motor Data

Power Supply	1~115/208-230 volt 3~208-230/460, 575 volt
Integrated full motor protection	integrated protection PTC/PTO on request (on-site trip unit required)
Protection Class	TEF (ODP on request)
Insulation Class	F

Hydraulic Data

Flange Connection	2" 125# ANSI compatible with ¼" pressure gauge tappings
Max Operating Pressure	175 PSI (12 bar)
Min. Fluid Temp	-5°F (-20 °C)
Max Fluid Temp	285°F (140 °C)
Max. Ambient Temp	104°F (40 °C)

Application

- Hot water heating systems
- Air conditioning systems
- Closed cooling circuits
- Industrial circulation systems
- Solar Systems
- Geothermal Systems

Approval Stamp

Dimensions & Weights

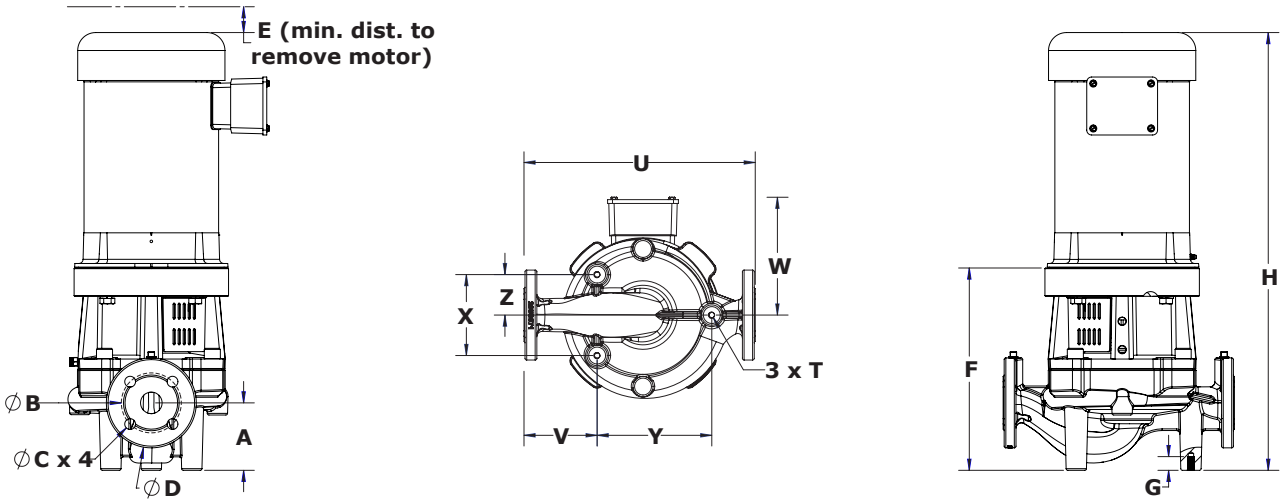

Dimensions and Weights

		Voltage		P2	Phase	Dimensions (in)													Weight
Model	**PEI**	**[V]**	**Motor**	**[HP]**	**[~]**	**Dia**	**A**	**E**	**F**	**G**	**H**	**T**	**U**	**V**	**W**	**X**	**Y**	**Z**	**lbs**
IL 2 20/105-4		115/230	TEFC	¾	1	2.00	3.55	2.3	11.0	0.79	21.4	3/8"-16	15	5.8	5.18	6.46	6.5	3.2	108
		115/230	ODP	¾	1	2.00	3.55	2.3	10.95	0.79	20.78	3/8"-16	15	5.8	4.65	6.46	6.5	3.23	109
		208/230-460	TEFC	¾	3	2.00	3.55	2.3	11.0	0.79	20.2	3/8"-16	15	5.8	5.2	6.46	6.5	3.2	101
		208/230-460	ODP	¾	3	2.00	3.55	2.3	10.95	0.79	21.11	3/8"-16	15	5.8	5.62	6.46	6.5	3.23	107
		575	TEFC	¾	3	2.00	3.55	2.31	10.95	0.79	20.23	3/8"-16	15	5.8	5.18	6.46	6.5	3.23	101
		575	ODP	¾	3	2.00	3.55	2.3	10.95	0.79	20	3/8"-16	15	5.8	3.32	6.46	6.5	3.23	99

Flange Dimensions

Dimensions - Inches		
ØB	**ØC x 4**	**ØD**
4.8	0.75 x 4	6.5

Submittal Data Sheet

In-line Centrifugal Pumps

Wilo-IL 2-45 - 2-70 (4 Pole)

Project:	
Engineer:	
Contractor:	
Submitted By:	Date:
Approved By:	Date:

Tag #	Model #	Flow	Head	HP	Cycle	Phase	Voltage	RPM
					60Hz			1750

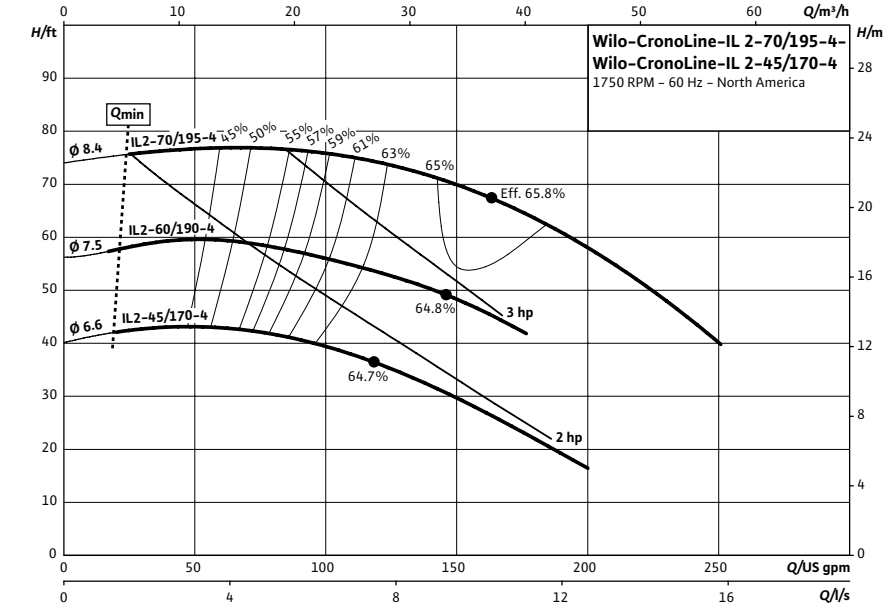

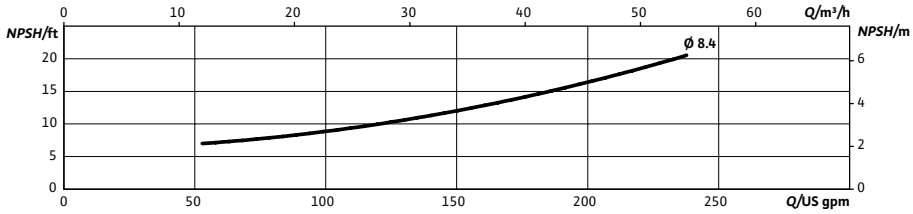

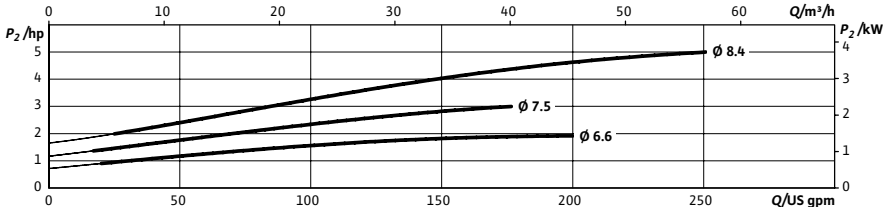

Product Info

Brand	Wilo
Product Description	IL 2-45 - IL 2-70

Construction Materials

Pump Volute	Cast Iron EN-GJL-250
Impeller	Bronze (cast iron optional)
Shaft	316L stainless steel
Mechanical Seal	Q1Q1X4GG (silicium carbide seal faces, HNBR elastomers)

Motor Data

Power Supply	1~115/208-230 volt 3~208-230/460, 575 volt
Integrated full motor protection	integrated protection PTC/PTO on request (on-site trip unit required)
Protection Class	TEF (ODP on request)
Insulation Class	F

Hydraulic Data

Flange Connection	2" 125# ANSI compatible with ¼" pressure gauge tappings
Max Operating Pressure	175 PSI (12 bar)
Min. Fluid Temp	-5°F (-20 °C)
Max Fluid Temp	285°F (140 °C)
Max. Ambient Temp	104°F (40 °C)

Application

- Hot water heating systems
- Air conditioning systems
- Closed cooling circuits
- Industrial circulation systems
- Solar Systems
- Geothermal Systems

Approval Stamp

Dimensions & Weights

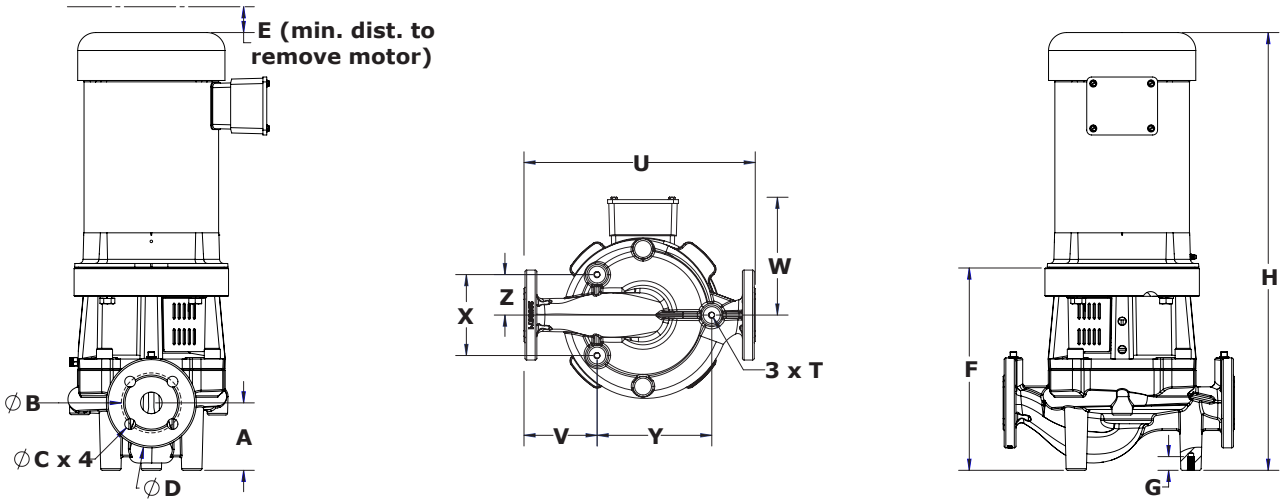

Dimensions and Weights

		Voltage		P2	Phase	Dimensions (in)													Weight
Model	**PEI**	**[V]**	**Motor**	**[HP]**	**[~]**	**Dia**	**A**	**E**	**F**	**G**	**H**	**T**	**U**	**V**	**W**	**X**	**Y**	**Z**	**lbs**
IL 2 45/170-4	0.97	115/230	TEFC	2	1	2.00	4.72	2.38	11.8	0.79	25.6	3/8"-16	17.5	6.79	5.88	6.3	7.95	3.2	143
		115/230	ODP	2	1	2.00	4.72	2.37	11.81	0.79	23.85	3/8"-16	17.5	6.79	5.56	6.3	7.95	3.15	141
		208/230-460	TEFC	2	3	2.00	4.72	2.4	11.8	0.79	23.0	3/8"-16	17.5	6.79	5.7	6.3	7.95	3.2	139
		208/230-460	ODP	2	3	2.00	4.72	2.37	11.81	0.79	22.93	3/8"-16	17.5	6.79	5.62	6.3	7.95	3.15	135
		575	TEFC	2	3	2.00	4.72	2.37	11.81	0.79	22.97	3/8"-16	17.5	6.79	5.74	6.3	7.95	3.15	138
		575	ODP	2	3	2.00	4.72	2.37	11.81	0.79	22.01	3/8"-16	17.5	6.79	5.88	6.3	7.95	3.15	132
IL 2 60/190-4	0.97	115/230	TEFC	3	1	2.00	4.72	2.87	13.01	0.79	26.73	3/8"-16	17.5	6.79	6.87	6.3	7.95	3.15	180
		115/230	ODP	3	1	2.00	4.72	2.87	13.01	0.79	26.73	3/8"-16	17.5	6.79	6.75	6.3	7.95	3.15	179
		208/230-460	TEFC	3	3	2.00	4.72	2.9	13.0	0.79	26.8	3/8"-16	17.5	6.79	6.9	6.3	7.95	3.2	174
		208/230-460	ODP	3	3	2.00	4.72	2.87	13.01	0.79	26.75	3/8"-16	17.5	6.79	6.75	6.3	7.95	3.15	175
		575	TEFC	3	3	2.00	4.72	2.87	13.01	0.79	26.75	3/8"-16	17.5	6.79	6.87	6.3	7.95	3.15	172
		575	ODP	3	3	2.00	4.72	2.87	13.01	0.79	25.33	3/8"-16	17.5	6.79	6.7	6.3	7.95	3.15	177
IL 2 70/195-4	0.97	208/230-460	TEFC	5	3	2.00	4.72	2.9	13.0	0.79	28.3	3/8"-16	17.5	6.79	6.9	6.3	7.95	3.2	190
		208/230-460	ODP	5	3	2.00	4.72	2.9	13.01	0.79	26.75	3/8"-16	17.5	6.79	6.75	6.3	7.95	3.15	194
		575	TEFC	5	3	2.00	4.72	2.9	13.01	0.79	28.25	3/8"-16	17.5	6.79	6.87	6.3	7.95	3.15	190
		575	ODP	5	3	2.00	4.72	2.9	13.01	0.79	26.51	3/8"-16	17.5	6.79	6.7	6.3	7.95	3.15	193

Flange Dimensions

Dimensions - Inches		
ØB	**ØC x 4**	**ØD**
4.8	0.75 x 4	6.5

Submittal Data Sheet

In-line Centrifugal Pumps

Wilo-IL 2-110 - 2-130 (4 Pole)

Project:	
Engineer:	
Contractor:	
Submitted By:	Date:
Approved By:	Date:

Tag #	Model #	Flow	Head	HP	Cycle	Phase	Voltage	RPM
					60Hz			1750

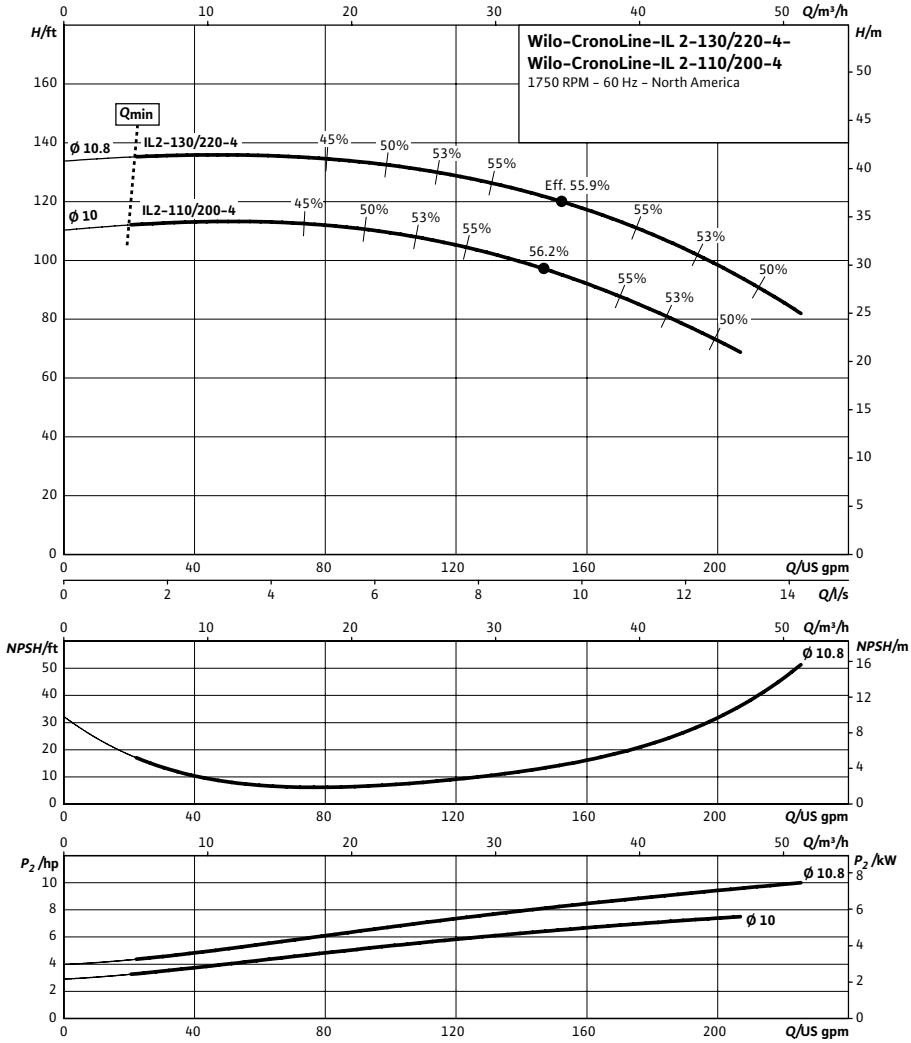

Product Info

Brand	Wilo
Product Description	IL 2-110 - IL 2-130

Construction Materials

Pump Volute	Cast Iron EN-GJL-250
Impeller	Bronze (cast iron optional)
Shaft	316L stainless steel
Mechanical Seal	Q1Q1X4GG (silicium carbide seal faces, HNBR elastomers)

Motor Data

Power Supply	1~115/208-230 volt 3~208-230/460, 575 volt
Integrated full motor protection	integrated protection PTC/PTO on request (on-site trip unit required)
Protection Class	TEF (ODP on request)
Insulation Class	F

Hydraulic Data

Flange Connection	2" 125# ANSI compatible with ¼" pressure gauge tappings
Max Operating Pressure	175 PSI (12 bar)
Min. Fluid Temp	-5°F (-20 °C)
Max Fluid Temp	285°F (140 °C)
Max. Ambient Temp	104°F (40 °C)

Application

- Hot water heating systems
- Air conditioning systems
- Closed cooling circuits
- Industrial circulation systems
- Solar Systems
- Geothermal Systems

Approval Stamp

Dimensions & Weights

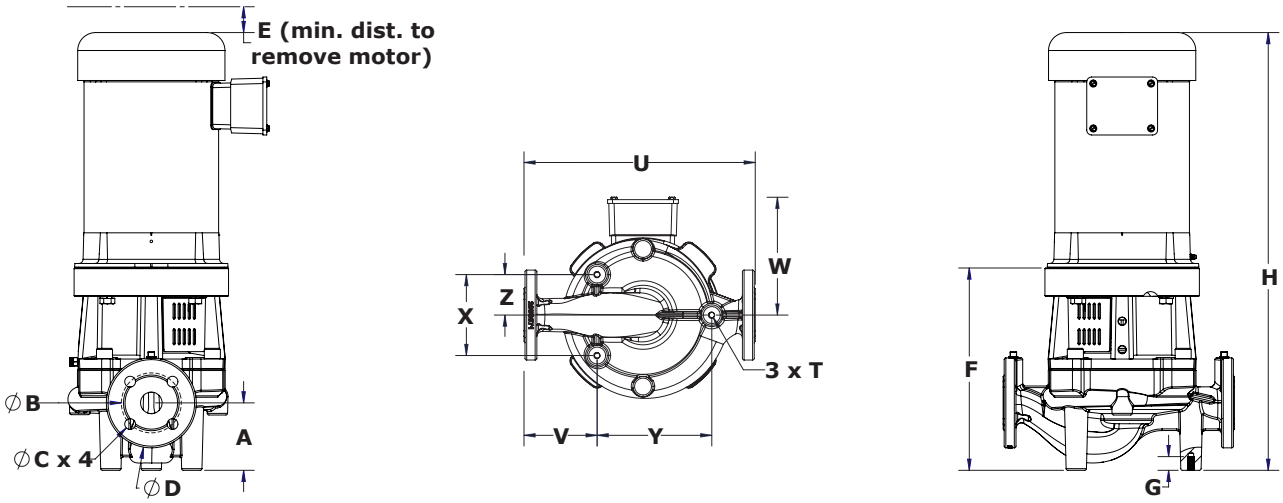

Dimensions and Weights

		Voltage		P2	Phase	Dimensions (in)													Weight
Model	**PEI**	**[V]**	**Motor**	**[HP]**	**[~]**	**Dia**	**A**	**E**	**F**	**G**	**H**	**T**	**U**	**V**	**W**	**X**	**Y**	**Z**	**lbs**
IL 2 110/200-4	0.97	208/230-460	TEFC	7.5	3	2.00	4.75	3.4	14.2	0.79	30.6	1/2"-13	19	7.28	8.1	7	8	3.5	279
		208/230-460	ODP	7.5	3	2.00	4.75	3.4	14.24	0.79	29.6	1/2"-13	19	7.28	7.91	7	8	3.5	248
		575	TEFC	7.5	3	2.00	4.75	3.4	14.24	0.79	30.71	1/2"-13	19	7.28	8.05	7	8	3.5	279
		575	ODP	7.5	3	2.00	4.75	3.4	14.24	0.79	27.51	1/2"-13	19	7.28	7.97	7	8	3.5	253
IL 2 130/220-4	0.97	208/230-460	TEFC	10	3	2.00	4.75	3.4	14.2	0.79	32.1	1/2"-13	19	7.28	8.1	7	8	3.5	293
		208/230-460	ODP	10	3	2.00	4.75	3.4	14.24	0.79	29.6	1/2"-13	19	7.28	7.91	7	8	3.5	260
		575	TEFC	10	3	2.00	4.75	3.4	14.24	0.79	32.21	1/2"-13	19	7.28	8.05	7	8	3.5	293
		575	ODP	10	3	2.00	4.75	3.4	14.24	0.79	27.51	1/2"-13	19	7.28	7.97	7	8	3.5	257

Flange Dimensions

Dimensions - Inches		
ØB	**ØC x 4**	**ØD**
4.8	0.75 x 4	6.5

Submittal Data Sheet

In-line Centrifugal Pumps

Wilo-IL 2.5-20 - 2.5-50 (4 Pole)

		Project:						
		Engineer:						
		Contractor:						
		Submitted By:				Date:		
		Approved By:				Date:		
Tag #	**Model #**	**Flow**	**Head**	**HP**	**Cycle**	**Phase**	**Voltage**	**RPM**
					60Hz			1750

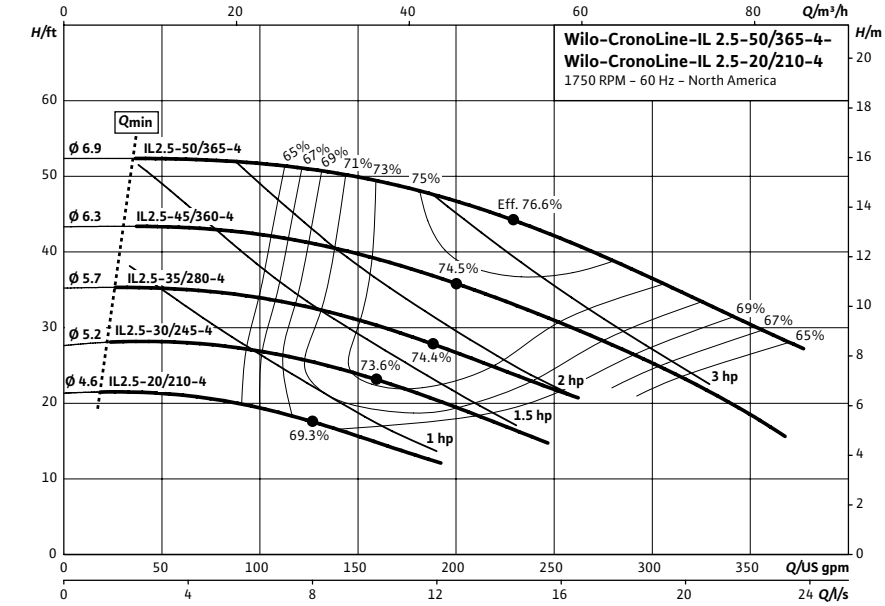

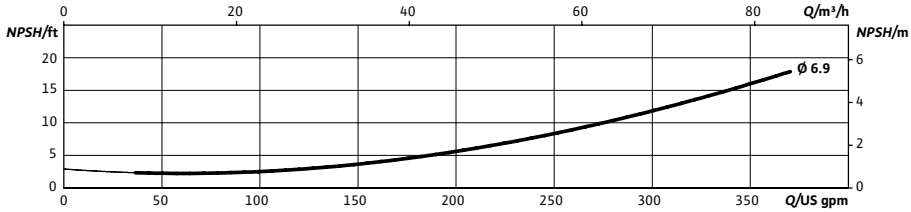

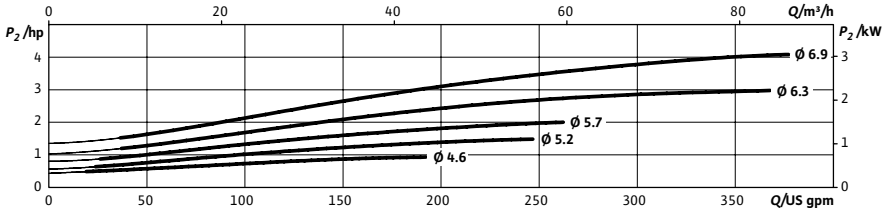

Product Info

Brand	Wilo
Product Description	IL 2.5-20 - IL 2.5-50

Construction Materials

Pump Volute	Cast Iron EN-GJL-250
Impeller	Bronze (cast iron optional)
Shaft	316L stainless steel
Mechanical Seal	Q1Q1X4GG (silicium carbide seal faces, HNBR elastomers)

Motor Data

Power Supply	1~115/208-230 volt 3~208-230/460, 575 volt
Integrated full motor protection	integrated protection PTC/PTO on request (on-site trip unit required)
Protection Class	TEF (ODP on request)
Insulation Class	F

Hydraulic Data

Flange Connection	2 1/2" 125# ANSI compatible with ¼" pressure gauge tappings
Max Operating Pressure	175 PSI (12 bar)
Min. Fluid Temp	-5°F (-20 °C)
Max Fluid Temp	285°F (140 °C)
Max. Ambient Temp	104°F (40 °C)

Application

- Hot water heating systems
- Air conditioning systems
- Closed cooling circuits
- Industrial circulation systems
- Solar Systems
- Geothermal Systems

Approval Stamp

Dimensions & Weights

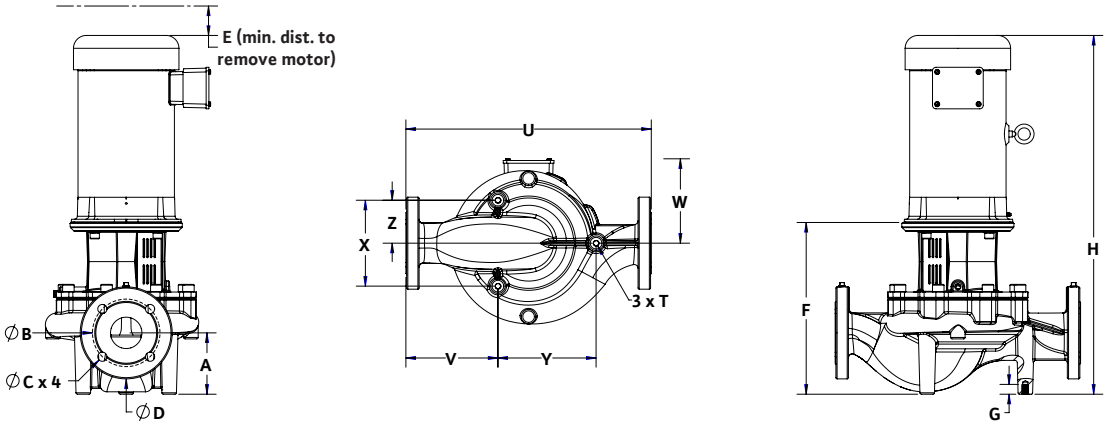

Dimensions and Weights

		Voltage		P2	Phase								Dimensions (in)						Weight
Model	**PEI**	**[V]**	**Motor**	**[HP]**	**[~]**	**Dia**	**A**	**E**	**F**	**G**	**H**	**T**	**U**	**V**	**W**	**X**	**Y**	**Z**	**lbs**
IL 2.5 20/210-4	0.94	115/230	TEFC	1	1	2.50	4.33	2.3	11.95	0.79	23.11	1/2"-13	17.5	6.64	5.71	7.09	7.87	3.55	132
		115/230	ODP	1	1	2.50	4.33	2.3	11.95	0.79	22.56	1/2"-13	17.5	6.64	4.65	7.09	7.87	3.55	132
		208/230-460	TEFC	1	3	2.50	4.33	2.3	11.95	0.79	22.11	1/2"-13	17.5	6.64	5.72	7.09	7.87	3.55	128
		208/230-460	ODP	1	3	2.50	4.33	2.3	11.95	0.79	22.11	1/2"-13	17.5	6.64	5.54	7.09	7.87	3.55	129
		575	TEFC	1	3	2.50	4.33	2.3	11.95	0.79	22.11	1/2"-13	17.5	6.64	5.71	7.09	7.87	3.55	127
		575	ODP	1	3	2.50	4.33	2.31	11.95	0.79	21.38	1/2"-13	17.5	6.64	3.32	7.09	7.87	3.55	118
IL 2.5 30/245-4	0.94	115/230	TEFC	1½	1	2.50	4.33	2.3	11.95	0.79	24	1/2"-13	17.5	6.64	5.75	7.09	7.87	3.55	140
		115/230	ODP	1½	1	2.50	4.33	2.3	11.95	0.79	22.96	1/2"-13	17.5	6.64	4.65	7.09	7.87	3.55	140
		208/230-460	TEFC	1½	3	2.50	4.33	2.3	11.95	0.79	23.11	1/2"-13	17.5	6.64	5.72	7.09	7.87	3.55	134
		208/230-460	ODP	1½	3	2.50	4.33	2.3	11.95	0.79	22.61	1/2"-13	17.5	6.64	5.88	7.09	7.87	3.55	129
		575	TEFC	1½	3	2.50	4.33	2.3	11.95	0.79	24	1/2"-13	17.5	6.64	5.71	7.09	7.87	3.55	142
		575	ODP	1½	3	2.50	4.33	2.3	11.95	0.79	22.61	1/2"-13	17.5	6.64	5.88	7.09	7.87	3.55	129
IL 2.5 35/280-4	0.94	115/230	TEFC	2	1	2.50	4.33	2.38	11.95	0.79	25.76	1/2"-13	17.5	6.64	5.88	7.09	7.87	3.55	144
		115/230	ODP	2	1	2.50	4.33	2.37	11.95	0.79	24	1/2"-13	17.5	6.64	5.56	7.09	7.87	3.55	142
		208/230-460	TEFC	2	3	2.50	4.33	2.37	11.95	0.79	23.11	1/2"-13	17.5	6.64	5.74	7.09	7.87	3.55	140
		208/230-460	ODP	2	3	2.50	4.33	2.37	11.95	0.79	23.07	1/2"-13	17.5	6.64	5.62	7.09	7.87	3.55	136
		575	TEFC	2	3	2.50	4.33	2.37	11.95	0.79	23.11	1/2"-13	17.5	6.64	5.74	7.09	7.87	3.55	139
		575	ODP	2	3	2.50	4.33	2.37	11.95	0.79	22.15	1/2"-13	17.5	6.64	5.88	7.09	7.87	3.55	133
IL 2.5 45/360-4	0.94	115	TEFC	3	1	2.50	4.33	2.87	13.5	0.79	27.23	1/2"-13	17.5	6.64	6.87	7.09	7.87	3.55	182
		115	ODP	3	1	2.50	4.33	2.87	13.5	0.79	27.23	1/2"-13	17.5	6.64	6.75	7.09	7.87	3.55	181
		208/230-460	TEFC	3	3	2.50	4.33	2.87	13.5	0.79	27.25	1/2"-13	17.5	6.64	6.87	7.09	7.87	3.55	176
		208/230-460	ODP	3	3	2.50	4.33	2.87	13.5	0.79	27.25	1/2"-13	17.5	6.64	6.75	7.09	7.87	3.55	177
		575	TEFC	3	3	2.50	4.33	2.87	13.5	0.79	27.25	1/2"-13	17.5	6.64	6.87	7.09	7.87	3.55	174
		575	ODP	2	3	2.50	4.33	2.87	13.5	0.79	25.82	1/2"-13	17.5	6.64	6.7	7.09	7.87	3.55	179
IL 2.5 50/365-4	0.94	208/230-460	TEFC	5	3	2.50	4.33	2.9	13.5	0.79	28.75	1/2"-13	17.5	6.64	6.87	7.09	7.87	3.55	191
		208/230-460	ODP	5	3	2.50	4.33	2.9	13.5	0.79	27.25	1/2"-13	17.5	6.64	6.75	7.09	7.87	3.55	195
		575	TEFC	5	3	2.50	4.33	2.9	13.5	0.79	28.75	1/2"-13	17.5	6.64	6.87	7.09	7.87	3.55	191
		575	ODP	5	3	2.50	4.33	2.9	13.5	0.79	27.01	1/2"-13	17.5	6.64	6.7	7.09	7.87	3.55	194

Flange Dimensions

Dimensions - Inches		
ØB	**ØC x 4**	**ØD**
5.5	0.75 x 4	7.5

Submittal Data Sheet

In-line Centrifugal Pumps

Wilo-IL 2.5-70 - 2.5-90 (4 Pole)

Project:	
Engineer:	
Contractor:	
Submitted By:	Date:
Approved By:	Date:

Tag #	Model #	Flow	Head	HP	Cycle	Phase	Voltage	RPM
					60Hz			1750

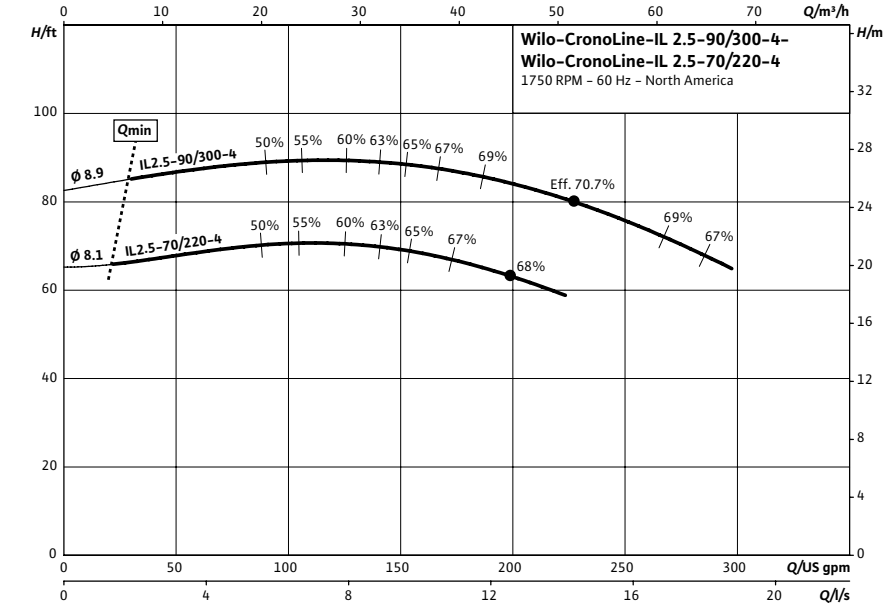

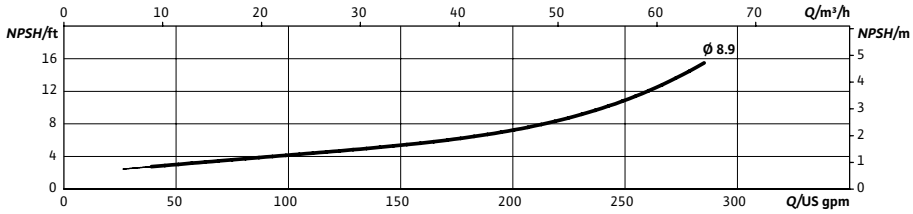

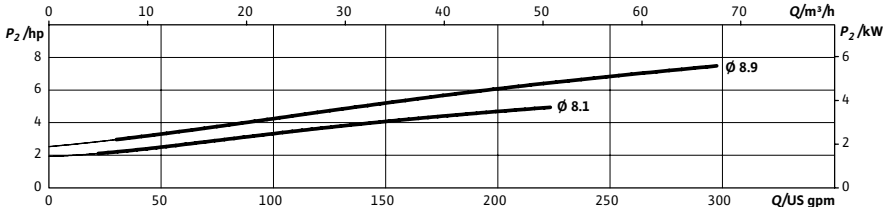

Product Info

Brand	Wilo
Product Description	IL 2.5-70 - IL 2.5-90

Construction Materials

Pump Volute	Cast Iron EN-GJL-250
Impeller	Bronze (cast iron optional)
Shaft	316L stainless steel
Mechanical Seal	Q1Q1X4GG (silicium carbide seal faces, HNBR elastomers)

Motor Data

Power Supply	1~115/208-230 volt 3~208-230/460, 575 volt
Integrated full motor protection	integrated protection PTC/PTO on request (on-site trip unit required)
Protection Class	TEF (ODP on request)
Insulation Class	F

Hydraulic Data

Flange Connection	2 1/2" 125# ANSI compatible with ¼" pressure gauge tappings
Max Operating Pressure	175 PSI (12 bar)
Min. Fluid Temp	-5°F (-20 °C)
Max Fluid Temp	285°F (140 °C)
Max. Ambient Temp	104°F (40 °C)

Application

- Hot water heating systems
- Air conditioning systems
- Closed cooling circuits
- Industrial circulation systems
- Solar Systems
- Geothermal Systems

Approval Stamp

Dimensions & Weights

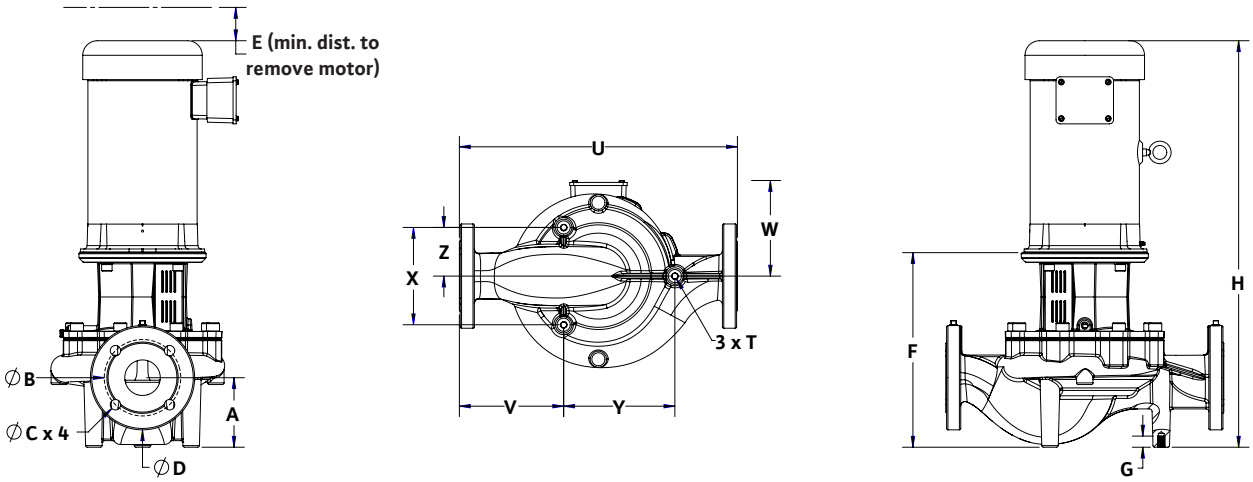

Dimensions and Weights

		Voltage		P2	Phase								Dimensions (in)						Weight
Model	**PEI**	**[V]**	**Motor**	**[HP]**	**[~]**	**Dia**	**A**	**E**	**F**	**G**	**H**	**T**	**U**	**V**	**W**	**X**	**Y**	**Z**	**lbs**
IL 2.5 70/220-4	0.92	208/230-460	TEFC	5	3	2.50	5	2.9	14	0.79	29.24	1/2"-13	20	7.5	6.87	7	8	3.5	214
		208/230-460	ODP	5	3	2.50	5	2.9	14	0.79	27.74	1/2"-13	20	7.5	6.75	7	8	3.5	218
		575	TEFC	5	3	2.50	5	2.9	14	0.79	29.24	1/2"-13	20	7.5	6.87	7	8	3.5	214
		575	ODP	5	3	2.50	5	2.9	14	0.79	27.5	1/2"-13	20	7.5	6.7	7	8	3.5	217
IL 2.5 90/300-4	0.92	208/230-460	TEFC	7½	3	2.50	5	3.4	14	0.79	30.39	1/2"-13	20	7.5	8.05	7	8	3.5	279
		208/230-460	ODP	7½	3	2.50	5	3.4	14	0.79	29.36	1/2"-13	20	7.5	7.91	7	8	3.5	248
		575	TEFC	7½	3	2.50	5	3.4	14	0.79	30.47	1/2"-13	20	7.5	8.05	7	8	3.5	279
		575	ODP	7½	3	2.50	5	3.4	14	0.79	27.26	1/2"-13	20	7.5	7.97	7	8	3.5	253

Flange Dimensions

Dimensions - Inches		
ØB	**ØC x 4**	**ØD**
4.75	0.75 x 4	6.5

Submittal Data Sheet

In-line Centrifugal Pumps

Wilo-IL 2.5-95 - 2.5-135 (4 Pole)

Project:	
Engineer:	
Contractor:	
Submitted By:	Date:
Approved By:	Date:

Tag #	Model #	Flow	Head	HP	Cycle	Phase	Voltage	RPM
					60Hz			1750

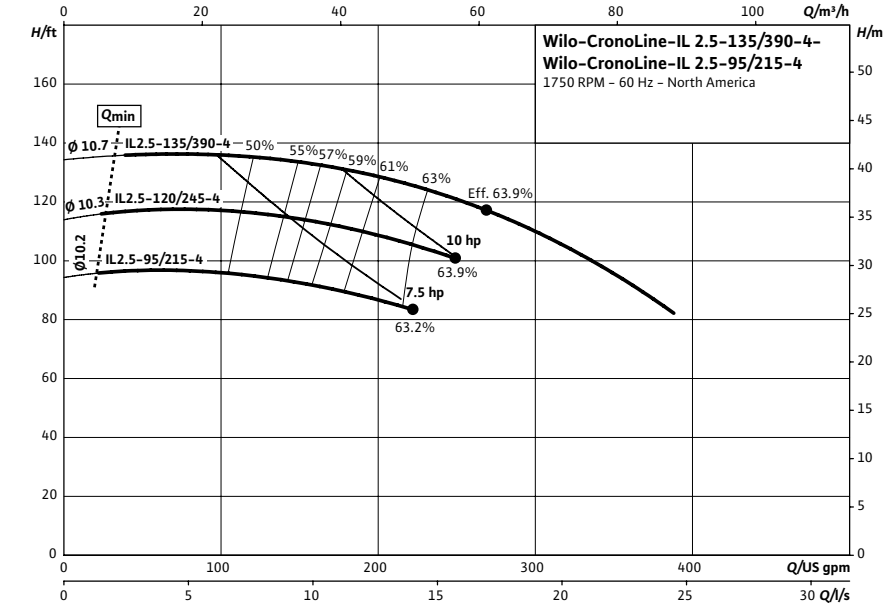

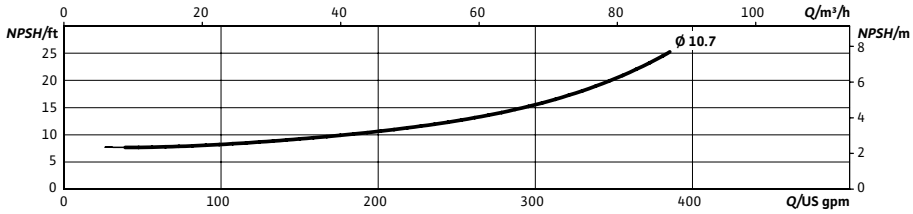

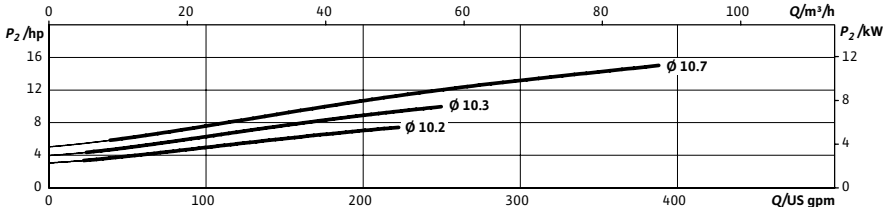

Product Info

Brand	Wilo
Product Description	IL 2.5-95 - IL 2.5-135

Construction Materials

Pump Volute	Cast Iron EN-GJL-250
Impeller	Bronze (cast iron optional)
Shaft	316L stainless steel
Mechanical Seal	Q1Q1X4GG (silicium carbide seal faces, HNBR elastomers)

Motor Data

Power Supply	1~115/208-230 volt 3~208-230/460, 575 volt
Integrated full motor protection	integrated protection PTC/PTO on request (on-site trip unit required)
Protection Class	TEF (ODP on request)
Insulation Class	F

Hydraulic Data

Flange Connection	2 1/2" 125# ANSI compatible with ¼" pressure gauge tappings
Max Operating Pressure	175 PSI (12 bar)
Min. Fluid Temp	-5°F (-20 °C)
Max Fluid Temp	285°F (140 °C)
Max. Ambient Temp	104°F (40 °C)

Application

- Hot water heating systems
- Air conditioning systems
- Closed cooling circuits
- Industrial circulation systems
- Solar Systems
- Geothermal Systems

Approval Stamp

Dimensions & Weights

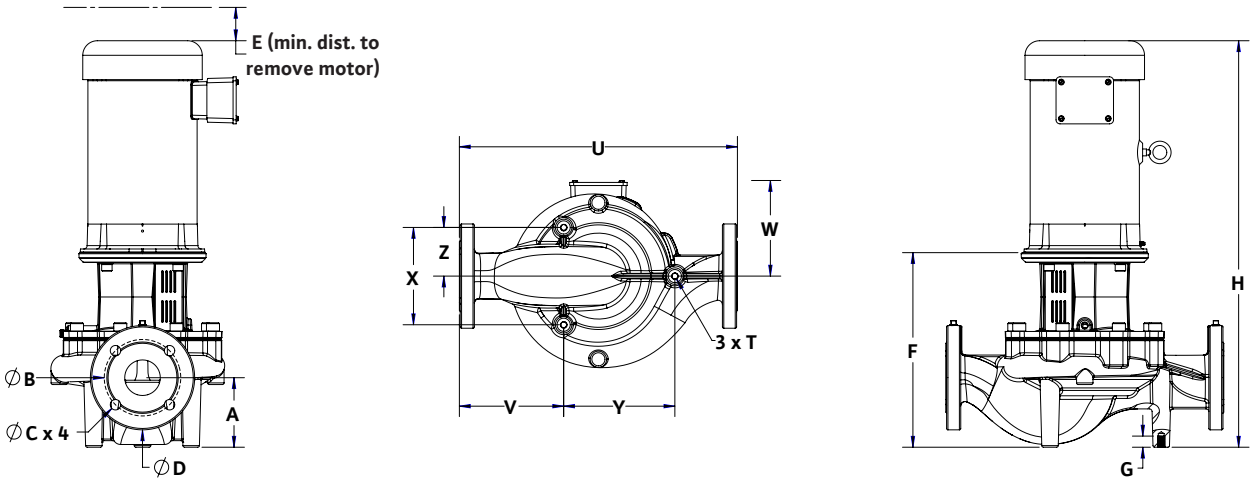

Dimensions and Weights

		Voltage		P2	Phase							Dimensions (in)							Weight
Model	**PEI**	**[V]**	**Motor**	**[HP]**	**[~]**	**Dia**	**A**	**E**	**F**	**G**	**H**	**T**	**U**	**V**	**W**	**X**	**Y**	**Z**	**lbs**
IL 2.5 95/215-4	0.98	208/230-460	TEFC	7½	3	2.50	5.25	3.4	14.88	0.79	31.27	1/2"-13	20.5	7.47	8.05	8	9	4	292
		208/230-460	ODP	7½	3	2.50	5.25	3.4	14.88	0.79	30.24	1/2"-13	20.5	7.47	7.91	8	9	4	261
		575	TEFC	7½	3	2.50	5.25	3.4	14.88	0.79	31.35	1/2"-13	20.5	7.47	8.05	8	9	4	292
		575	ODP	7½	3	2.50	5.25	3.4	14.88	0.79	28.15	1/2"-13	20.5	7.47	7.97	8	9	4	266
IL 2.5 120/245-4	0.98	208/230-460	TEFC	10	3	2.50	5.25	3.4	14.88	0.79	32.77	1/2"-13	20.5	7.47	8.05	8	9	4	306
		208/230-460	ODP	10	3	2.50	5.25	3.4	14.88	0.79	30.24	1/2"-13	20.5	7.47	7.91	8	9	4	273
		575	TEFC	10	3	2.50	5.25	3.4	14.88	0.79	32.85	1/2"-13	20.5	7.47	8.05	8	9	4	306
		575	ODP	10	3	2.50	5.25	3.4	14.88	0.79	28.15	1/2"-13	20.5	7.47	7.97	8	9	4	270
IL 2.5 135/390-4	0.98	208/230-460	TEFC	15	3	2.50	5.25	4.0	14.88	0.79	34.72	1/2"-13	20.5	7.47	10.04	8	9	4	426
		208/230-460	ODP	15	3	2.50	5.25	4.0	14.88	0.79	34.93	1/2"-13	20.5	7.47	8.94	8	9	4	393
		575	TEFC	15	3	2.50	5.25	4.0	14.88	0.79	34.72	1/2"-13	20.5	7.47	10.04	8	9	4	409
		575	ODP	15	3	2.50	5.25	4.0	14.88	0.79	31.97	1/2"-13	20.5	7.47	10.46	8	9	4	410

Flange Dimensions

Dimensions – Inches		
ØB	**ØC x 4**	**ØD**
5.5	0.75 x 4	7.5

Submittal Data Sheet

In-line Centrifugal Pumps

Wilo-IL 3-25 - 3-50 (4 Pole)

Project:	
Engineer:	
Contractor:	
Submitted By:	Date:
Approved By:	Date:

Tag #	Model #	Flow	Head	HP	Cycle	Phase	Voltage	RPM
					60Hz			1750

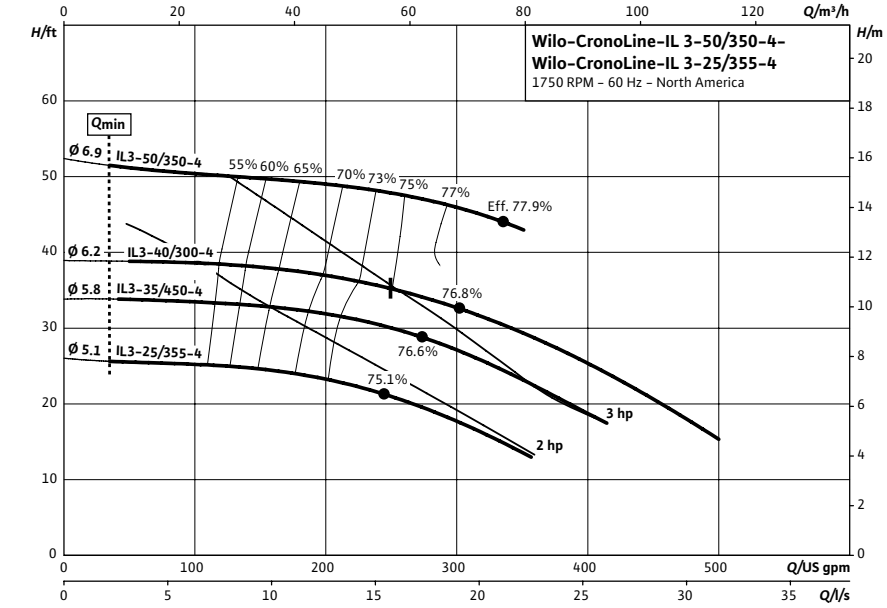

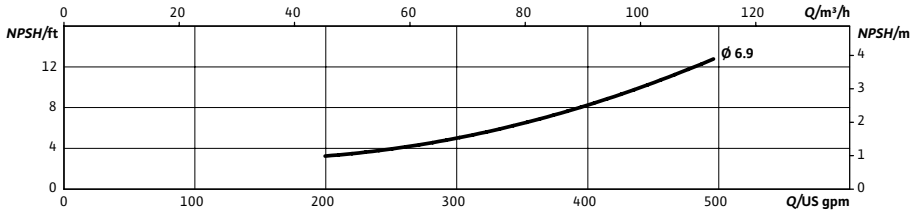

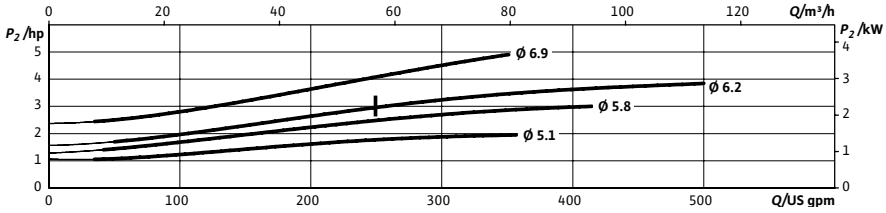

Product Info

Brand	Wilo
Product Description	IL 3-25 - IL 3-50

Construction Materials

Pump Volute	Cast Iron EN-GJL-250
Impeller	Bronze (cast iron optional)
Shaft	316L stainless steel
Mechanical Seal	Q1Q1X4GG (silicium carbide seal faces, HNBR elastomers)

Motor Data

Power Supply	1~115/208-230 volt 3~208-230/460, 575 volt
Integrated full motor protection	integrated protection PTC/PTO on request (on-site trip unit required)
Protection Class	TEF (ODP on request)
Insulation Class	F

Hydraulic Data

Flange Connection	3" 125# ANSI compatible with ¼" pressure gauge tappings
Max Operating Pressure	175 PSI (12 bar)
Min. Fluid Temp	-5°F (-20 °C)
Max Fluid Temp	285°F (140 °C)
Max. Ambient Temp	104°F (40 °C)

Application

- Hot water heating systems
- Air conditioning systems
- Closed cooling circuits
- Industrial circulation systems
- Solar Systems
- Geothermal Systems

Approval Stamp

Dimensions & Weights

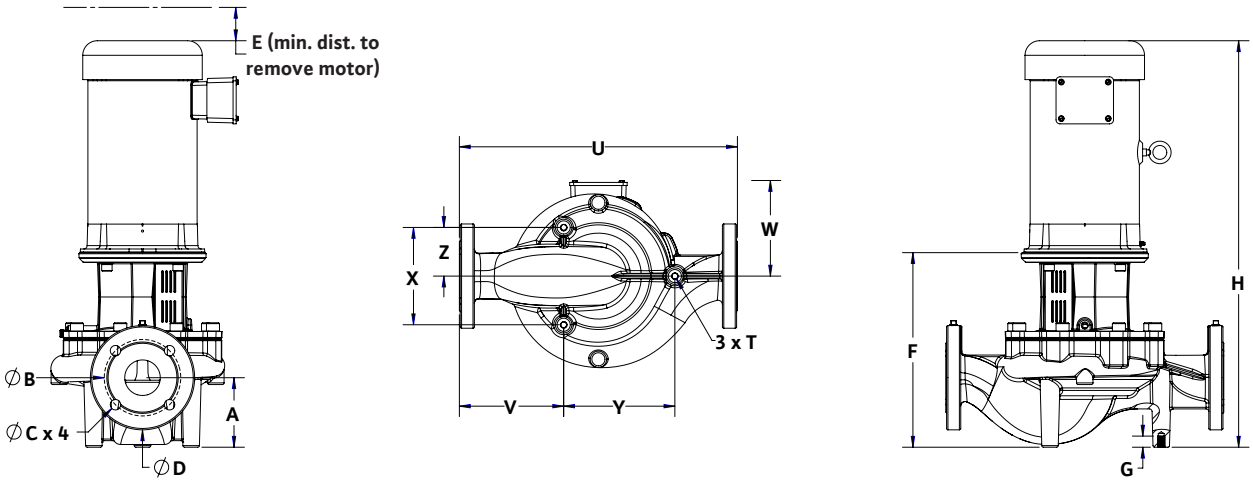

Dimensions and Weights

		Voltage		P2	Phase	Dimensions (in)													Weight
Model	**PEI**	**[V]**	**Motor**	**[HP]**	**[~]**	**Dia**	**A**	**E**	**F**	**G**	**H**	**T**	**U**	**V**	**W**	**X**	**Y**	**Z**	**lbs**
IL 3 25/355-4	0.97	115/230	TEFC	2	1	3.00	4.84	2.4	12.73	0.79	26.54	1/2"-13	19	7.6	5.88	7.09	7.87	3.55	165
		115/230	ODP	2	1	3.00	4.84	2.4	12.73	0.79	24.77	1/2"-13	19	7.6	5.56	7.09	7.87	3.55	163
		208/230-460	TEFC	2	3	3.00	4.84	2.4	12.73	0.79	23.89	1/2"-13	19	7.6	5.74	7.09	7.87	3.55	161
		208/230-460	ODP	2	3	3.00	4.84	2.4	12.73	0.79	23.85	1/2"-13	19	7.6	5.62	7.09	7.87	3.55	157
		575	TEFC	2	3	3.00	4.84	2.4	12.73	0.79	23.89	1/2"-13	19	7.6	5.74	7.09	7.87	3.55	160
		575	ODP	2	3	3.00	4.84	2.4	12.73	0.79	22.93	1/2"-13	19	7.6	5.88	7.09	7.87	3.55	154
IL 3 35/450-4	0.97	115	TEFC	3	1	3.00	4.84	2.87	13.93	0.79	27.65	1/2"-13	19	7.6	6.87	7.09	7.87	3.55	203
		115	ODP	3	1	3.00	4.84	2.87	13.93	0.79	27.65	1/2"-13	19	7.6	6.75	7.09	7.87	3.55	202
		208/230-460	TEFC	3	3	3.00	4.84	2.87	13.93	0.79	27.67	1/2"-13	19	7.6	6.87	7.09	7.87	3.55	197
		208/230-460	ODP	3	3	3.00	4.84	2.87	13.93	0.79	27.67	1/2"-13	19	7.6	6.75	7.09	7.87	3.55	198
		575	TEFC	3	3	3.00	4.84	2.87	13.93	0.79	27.67	1/2"-13	19	7.6	6.87	7.09	7.87	3.55	195
		575	ODP	3	3	3.00	4.84	2.87	13.93	0.79	26.25	1/2"-13	19	7.6	6.7	7.09	7.87	3.55	200
IL 3 40/300-4	0.97	115	TEFC	3	1	3.00	4.84	2.87	13.93	0.79	27.65	1/2"-13	19	7.6	6.87	7.09	7.87	3.55	203
		115	ODP	3	1	3.00	4.84	2.87	13.93	0.79	27.65	1/2"-13	19	7.6	6.75	7.09	7.87	3.55	202
		208/230-460	TEFC	3	3	3.00	4.84	2.87	13.93	0.79	27.67	1/2"-13	19	7.6	6.87	7.09	7.87	3.55	197
		208/230-460	ODP	3	3	3.00	4.84	2.87	13.93	0.79	27.67	1/2"-13	19	7.6	6.75	7.09	7.87	3.55	198
		575	TEFC	3	3	3.00	4.84	2.87	13.93	0.79	27.67	1/2"-13	19	7.6	6.87	7.09	7.87	3.55	195
		575	ODP	3	3	3.00	4.84	2.87	13.93	0.79	26.25	1/2"-13	19	7.6	6.7	7.09	7.87	3.55	200
IL 3 50/350-4	0.97	208/230-460	TEFC	5	3	3.00	4.84	2.9	13.93	0.79	29.17	1/2"-13	19	7.6	6.87	7.09	7.87	3.55	212
		208/230-460	ODP	5	3	3.00	4.84	2.9	13.93	0.79	27.67	1/2"-13	19	7.6	6.75	7.09	7.87	3.55	216
		575	TEFC	5	3	3.00	4.84	2.9	13.93	0.79	29.17	1/2"-13	19	7.6	6.87	7.09	7.87	3.55	212
		575	ODP	5	3	3.00	4.84	2.9	13.93	0.79	27.43	1/2"-13	19	7.6	6.7	7.09	7.87	3.55	215

Flange Dimensions

Dimensions - Inches		
ØB	**ØC x 4**	**ØD**
6	0.75 x 4	8.25

Submittal Data Sheet

In-line Centrifugal Pumps

Wilo-IL 3-45 - 3-80 (4 Pole)

Project:	
Engineer:	
Contractor:	
Submitted By:	Date:
Approved By:	Date:

Tag #	Model #	Flow	Head	HP	Cycle	Phase	Voltage	RPM
					60Hz			1750

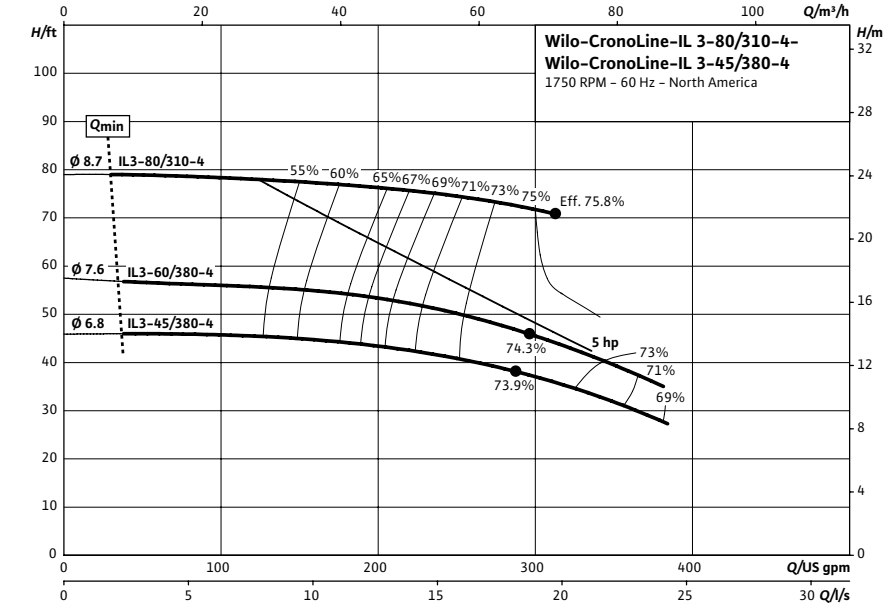

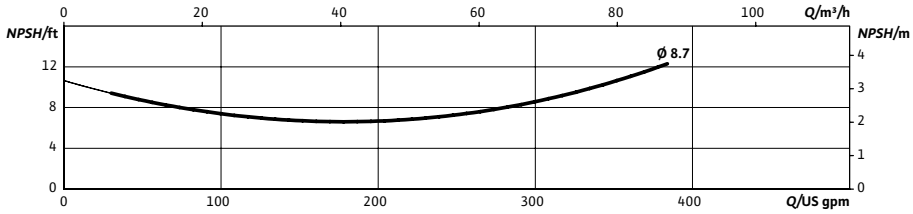

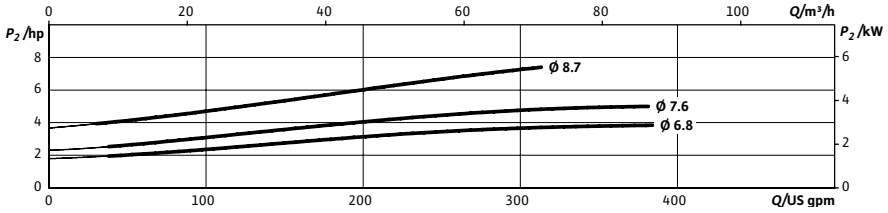

Product Info

Brand	Wilo
Product Description	IL 3-45 - IL 3-80

Construction Materials

Pump Volute	Cast Iron EN-GJL-250
Impeller	Bronze (cast iron optional)
Shaft	316L stainless steel
Mechanical Seal	Q1Q1X4GG (silicium carbide seal faces, HNBR elastomers)

Motor Data

Power Supply	1~115/208-230 volt 3~208-230/460, 575 volt
Integrated full motor protection	integrated protection PTC/PTO on request (on-site trip unit required)
Protection Class	TEF (ODP on request)
Insulation Class	F

Hydraulic Data

Flange Connection	3" 125# ANSI compatible with ¼" pressure gauge tappings
Max Operating Pressure	175 PSI (12 bar)
Min. Fluid Temp	-5°F (-20 °C)
Max Fluid Temp	285°F (140 °C)
Max. Ambient Temp	104°F (40 °C)

Application

- Hot water heating systems
- Air conditioning systems
- Closed cooling circuits
- Industrial circulation systems
- Solar Systems
- Geothermal Systems

Approval Stamp

Dimensions & Weights

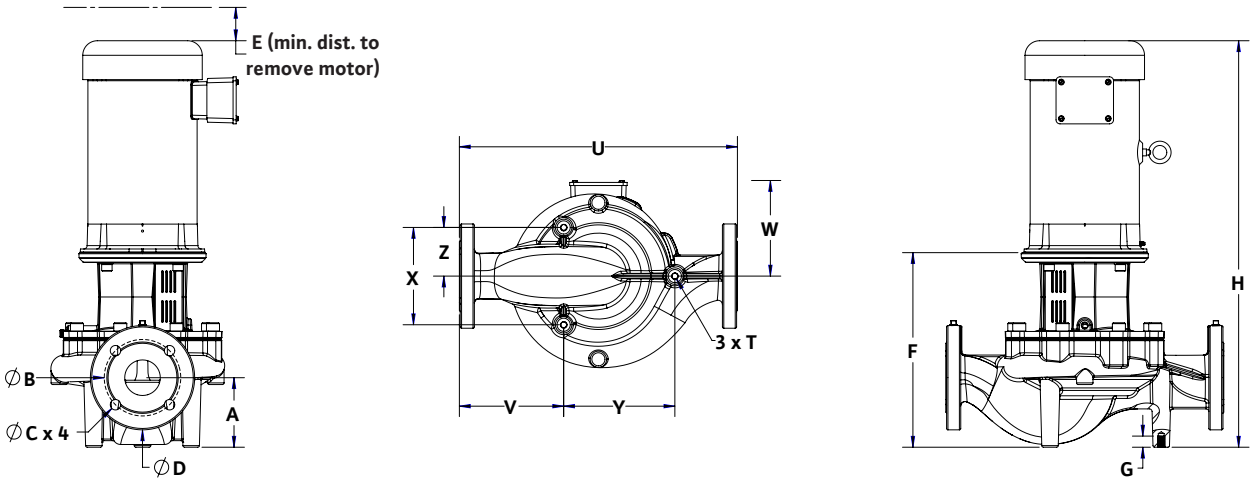

Dimensions and Weights

		Voltage		P2	Phase	Dimensions (in)													Weight
Model	**PEI**	**[V]**	**Motor**	**[HP]**	**[~]**	**Dia**	**A**	**E**	**F**	**G**	**H**	**T**	**U**	**V**	**W**	**X**	**Y**	**Z**	**lbs**
IL 3 45/380-4	0.95	208/230-460	TEFC	5	3	3.00	5.71	2.87	15	0.79	30.24	1/2"-13	21	8.87	6.87	8.66	9.13	4.33	234
		208/230-460	ODP	5	3	3.00	5.71	2.87	15	0.79	28.74	1/2"-13	21	8.87	6.75	8.66	9.13	4.33	238
		575	TEFC	5	3	3.00	5.71	2.87	15	0.79	30.24	1/2"-13	21	8.87	6.87	8.66	9.13	4.33	234
		575	ODP	5	3	3.00	5.71	2.87	15	0.79	28.5	1/2"-13	21	8.87	6.7	8.66	9.13	4.33	237
IL 3 60/380-4	0.95	208/230-460	TEFC	5	3	3.00	5.71	2.87	15	0.79	30.24	1/2"-13	21	8.87	6.87	8.66	9.13	4.33	234
		208/230-460	ODP	5	3	3.00	5.71	2.87	15	0.79	28.74	1/2"-13	21	8.87	6.75	8.66	9.13	4.33	238
		575	TEFC	5	3	3.00	5.71	2.87	15	0.79	30.24	1/2"-13	21	8.87	6.87	8.66	9.13	4.33	234
		575	ODP	5	3	3.00	5.71	2.87	15	0.79	28.5	1/2"-13	21	8.87	6.7	8.66	9.13	4.33	237
IL 3 80/310-4	0.95	208/230-460	TEFC	7½	3	3.00	5.71	3.4	15	0.79	31.39	1/2"-13	21	8.87	8.05	8.66	9.13	4.33	298
		208/230-460	ODP	7½	3	3.00	5.71	3.4	15	0.79	30.36	1/2"-13	21	8.87	7.91	8.66	9.13	4.33	267
		575	TEFC	7½	3	3.00	5.71	3.4	15	0.79	31.47	1/2"-13	21	8.87	8.05	8.66	9.13	4.33	298
		575	ODP	7½	3	3.00	5.71	3.4	15	0.79	28.27	1/2"-13	21	8.87	7.97	8.66	9.13	4.33	272

Flange Dimensions

Dimensions - Inches		
ØB	**ØC x 4**	**ØD**
6	0.75 x 4	8.25

Submittal Data Sheet

In-line Centrifugal Pumps

Wilo-IL 3-85- 3-130 (4 Pole)

Project:	
Engineer:	
Contractor:	
Submitted By:	Date:
Approved By:	Date:

Tag #	Model #	Flow	Head	HP	Cycle	Phase	Voltage	RPM
					60Hz			1750

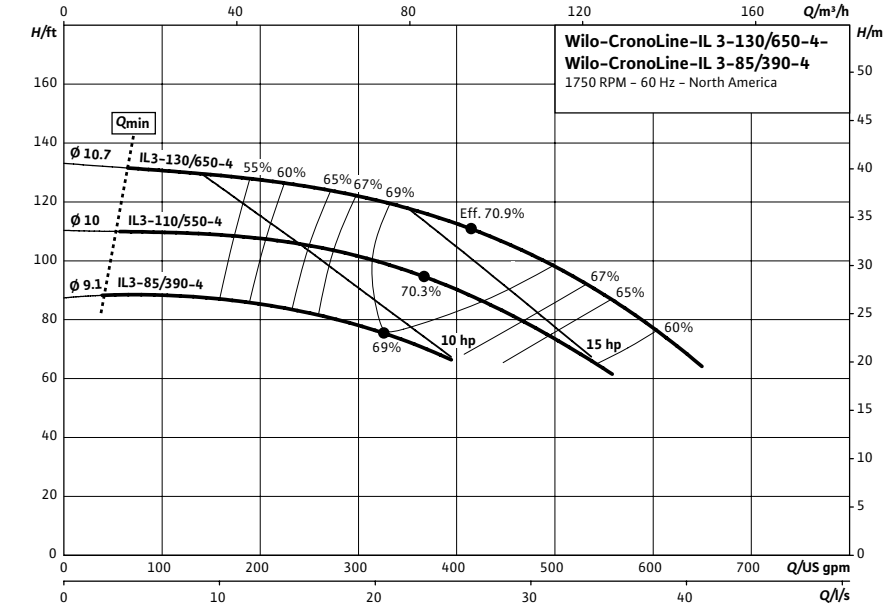

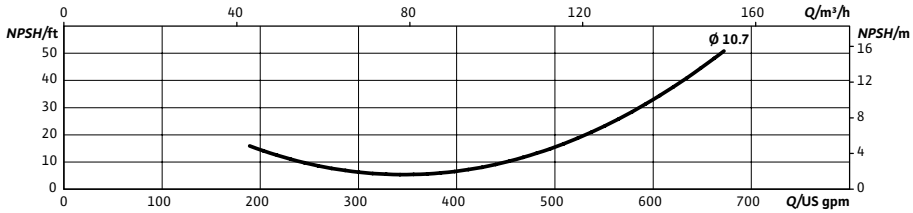

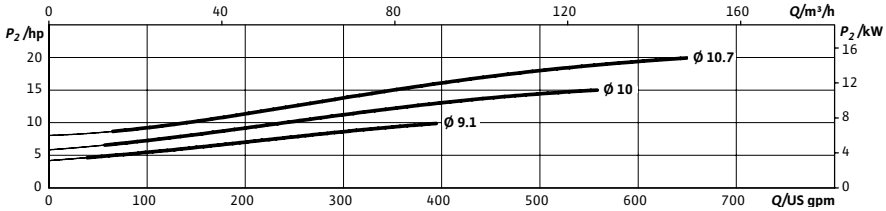

Product Info

Brand	Wilo
Product Description	IL 3-85 - IL 3-130

Construction Materials

Pump Volute	Cast Iron EN-GJL-250
Impeller	Bronze (cast iron optional)
Shaft	316L stainless steel
Mechanical Seal	Q1Q1X4GG (silicium carbide seal faces, HNBR elastomers)

Motor Data

Power Supply	1~115/208-230 volt 3~208-230/460, 575 volt
Integrated full motor protection	integrated protection PTC/PTO on request (on-site trip unit required)
Protection Class	TEF (ODP on request)
Insulation Class	F

Hydraulic Data

Flange Connection	3" 125# ANSI compatible with ¼" pressure gauge tappings
Max Operating Pressure	175 PSI (12 bar)
Min. Fluid Temp	-5°F (-20 °C)
Max Fluid Temp	285°F (140 °C)
Max. Ambient Temp	104°F (40 °C)

Application

- Hot water heating systems
- Air conditioning systems
- Closed cooling circuits
- Industrial circulation systems
- Solar Systems
- Geothermal Systems

Approval Stamp

Dimensions & Weights

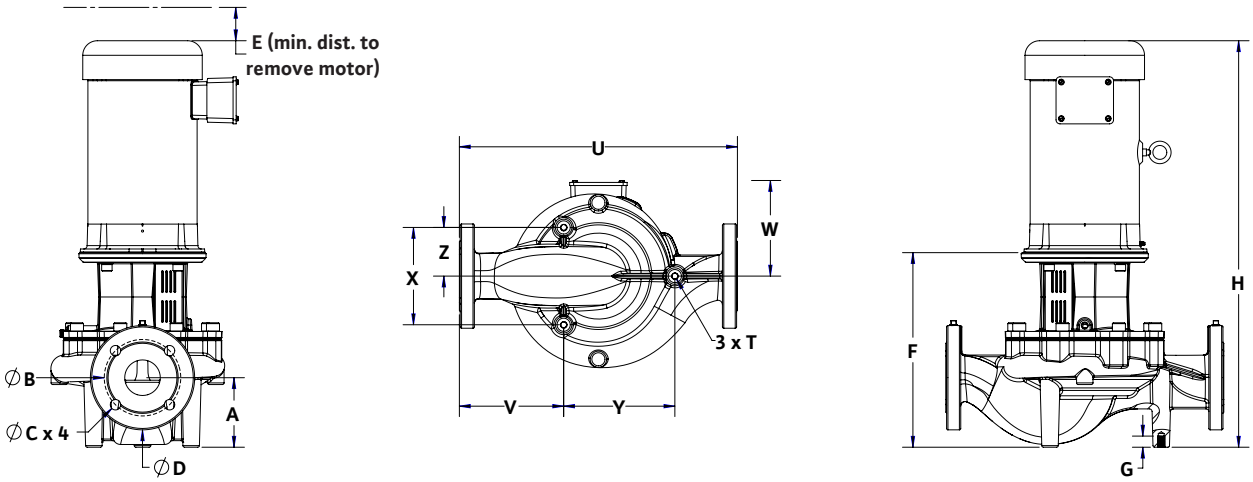

Dimensions and Weights

		Voltage		P2	Phase	Dimensions (in)													Weight
Model	**PEI**	**[V]**	**Motor**	**[HP]**	**[~]**	**Dia**	**A**	**E**	**F**	**G**	**H**	**T**	**U**	**V**	**W**	**X**	**Y**	**Z**	**lbs**
IL 3 85/390-4	1.00	208/230-460	TEFC	10	3	3.00	4.85	3.4	15.23	0.79	33.12	1/2"-13	21.5	7.36	8.05	10	10	5	331
		208/230-460	ODP	10	3	3.00	4.85	3.4	15.23	0.79	30.59	1/2"-13	21.5	7.36	7.91	10	10	5	298
		575	TEFC	10	3	3.00	4.85	3.4	15.23	0.79	33.2	1/2"-13	21.5	7.36	8.05	10	10	5	331
		575	ODP	10	3	3.00	4.85	3.4	15.23	0.79	28.5	1/2"-13	21.5	7.36	7.97	10	10	5	295
IL 3 110/550-4	1.00	208/230-460	TEFC	15	3	3.00	4.85	4.0	15.23	0.79	35.07	1/2"-13	21.5	7.36	10.04	10	10	5	451
		208/230-460	ODP	15	3	3.00	4.85	4.0	15.23	0.79	35.29	1/2"-13	21.5	7.36	8.94	10	10	5	418
		575	TEFC	15	3	3.00	4.85	4.0	15.23	0.79	35.07	1/2"-13	21.5	7.36	10.04	10	10	5	434
		575	ODP	15	3	3.00	4.85	4.0	15.23	0.79	32.32	1/2"-13	21.5	7.36	10.46	10	10	5	435
IL 3 130/650-4	1.00	208/230-460	TEFC	20	3	3.00	4.85	4.0	15.23	0.79	35.07	1/2"-13	21.5	7.36	10.04	10	10	5	488
		208/230-460	ODP	20	3	3.00	4.85	4.0	15.23	0.79	34.41	1/2"-13	21.5	7.36	9.63	10	10	5	424
		575	TEFC	20	3	3.00	4.85	4.0	15.23	0.79	35.07	1/2"-13	21.5	7.36	10.04	10	10	5	464
		575	ODP	20	3	3.00	4.85	4.0	15.23	0.79	34.07	1/2"-13	21.5	7.36	10.46	10	10	5	468

Flange Dimensions

Dimensions - Inches		
ØB	**ØC x 4**	**ØD**
6	0.75 x 4	8.25

Submittal Data Sheet

In-line Centrifugal Pumps

Wilo-IL 4-25 - 4-45 (4 Pole)

Project:	
Engineer:	
Contractor:	
Submitted By:	Date:
Approved By:	Date:

Tag #	Model #	Flow	Head	HP	Cycle	Phase	Voltage	RPM
					60Hz			1750

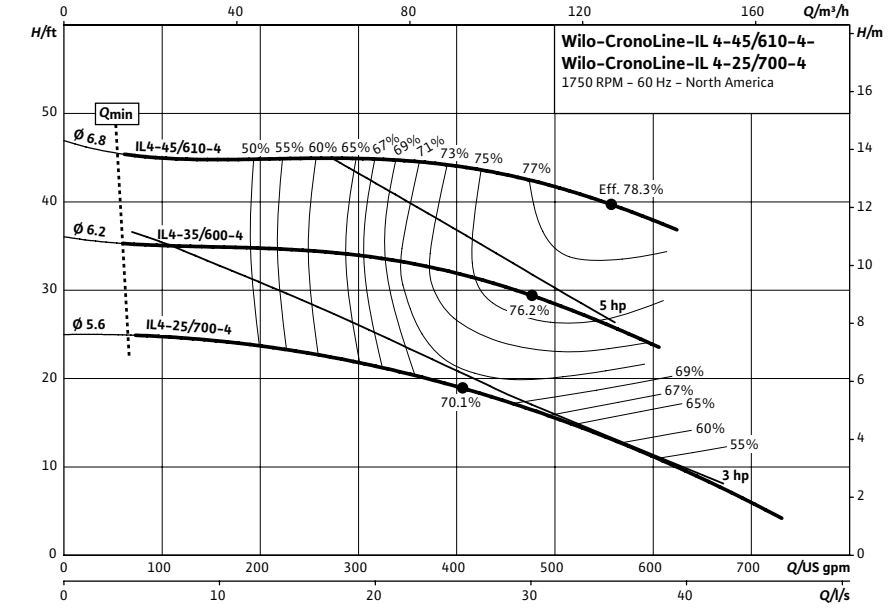

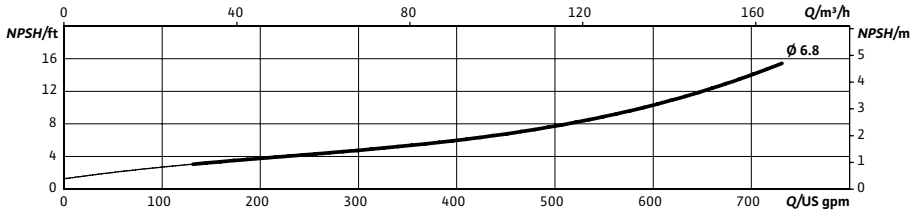

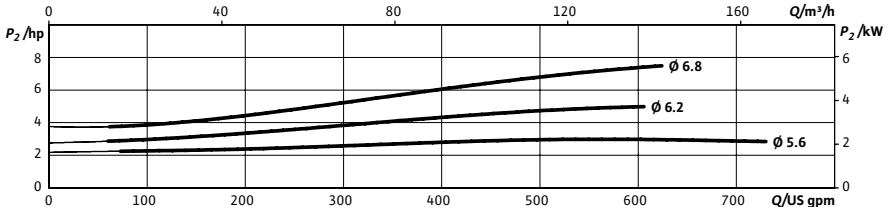

Product Info

Brand	Wilo
Product Description	IL 4-25- IL 4-45

Construction Materials

Pump Volute	Cast Iron EN-GJL-250
Impeller	Bronze (cast iron optional)
Shaft	316L stainless steel
Mechanical Seal	Q1Q1X4GG (silicium carbide seal faces, HNBR elastomers)

Motor Data

Power Supply	1~115/208-230 volt 3~208-230/460, 575 volt
Integrated full motor protection	integrated protection PTC/PTO on request (on-site trip unit required)
Protection Class	TEF (ODP on request)
Insulation Class	F

Hydraulic Data

Flange Connection	4" 125# ANSI compatible with ¼" pressure gauge tappings
Max Operating Pressure	175 PSI (12 bar)
Min. Fluid Temp	-5°F (-20 °C)
Max Fluid Temp	285°F (140 °C)
Max. Ambient Temp	104°F (40 °C)

Application

- Hot water heating systems
- Air conditioning systems
- Closed cooling circuits
- Industrial circulation systems
- Solar Systems
- Geothermal Systems

Approval Stamp

Dimensions & Weights

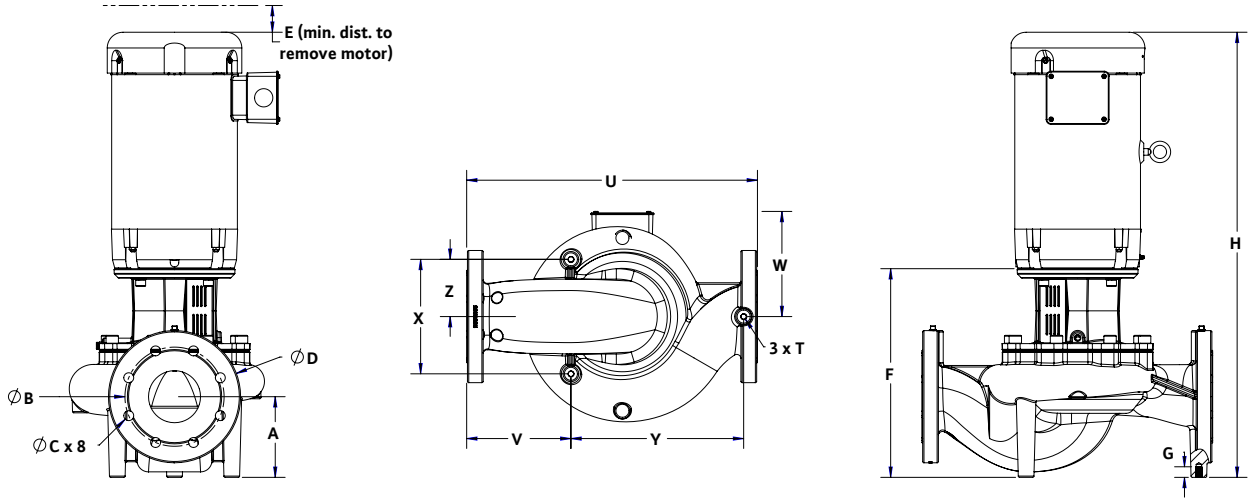

Dimensions and Weights

		Voltage		P2	Phase	Dimensions (in)													Weight
Model	**PEI**	**[V]**	**Motor**	**[HP]**	**[~]**	**Dia**	**A**	**E**	**F**	**G**	**H**	**T**	**U**	**V**	**W**	**X**	**Y**	**Z**	**lbs**
IL 4 25/700-4	0.99	115	TEFC	3	1	4.00	5.2	2.87	15.65	0.79	29.37	1/2"-13	20.5	7.83	6.87	7.87	11.57	3.94	242
		115	ODP	3	1	4.00	5.2	2.87	15.65	0.79	29.37	1/2"-13	20.5	7.83	6.75	7.87	11.57	3.94	241
		208/230-460	TEFC	3	3	4.00	5.2	2.87	15.65	0.79	29.39	1/2"-13	20.5	7.83	6.87	7.87	11.57	3.94	236
		208/230-460	ODP	3	3	4.00	5.2	2.87	15.65	0.79	29.39	1/2"-13	20.5	7.83	6.75	7.87	11.57	3.94	237
		575	TEFC	3	3	4.00	5.2	2.87	15.65	0.79	29.39	1/2"-13	20.5	7.83	6.87	7.87	11.57	3.94	234
		575	ODP	3	3	4.00	5.2	2.87	15.65	0.79	27.97	1/2"-13	20.5	7.83	6.7	7.87	11.57	3.94	239
IL 4 35/600-4	0.99	208/230-460	TEFC	5	3	4.00	5.2	2.9	15.65	0.79	30.89	1/2"-13	20.5	7.83	6.87	7.87	11.57	3.94	251
		208/230-460	ODP	5	3	4.00	5.2	2.9	15.65	0.79	29.39	1/2"-13	20.5	7.83	6.75	7.87	11.57	3.94	255
		575	TEFC	5	3	4.00	5.2	2.9	15.65	0.79	30.89	1/2"-13	20.5	7.83	6.87	7.87	11.57	3.94	251
		575	ODP	5	3	4.00	5.2	2.9	15.65	0.79	29.15	1/2"-13	20.5	7.83	6.7	7.87	11.57	3.94	254
IL 4 45/610-4	0.99	208/230-460	TEFC	7½	3	4.00	5.2	3.4	15.65	0.79	32.03	1/2"-13	20.5	7.83	8.05	7.87	11.57	3.94	315
		208/230-460	ODP	7½	3	4.00	5.2	3.4	15.65	0.79	31.01	1/2"-13	20.5	7.83	7.91	7.87	11.57	3.94	284
		575	TEFC	7½	3	4.00	5.2	3.4	15.65	0.79	32.11	1/2"-13	20.5	7.83	8.05	7.87	11.57	3.94	315
		575	ODP	7½	3	4.00	5.2	3.4	15.65	0.79	28.91	1/2"-13	20.5	7.83	7.97	7.87	11.57	3.94	289

Flange Dimensions

Dimensions - Inches		
ØB	**ØC x 4**	**ØD**
7.5	0.75 x 4	10