Pioneering for You

wilo

Wilo-Sefa SA

zh 安装及操作说明
en Installation and operating instructions

9034735 Ed01-06/2015 WH

图 (Fig.) 1

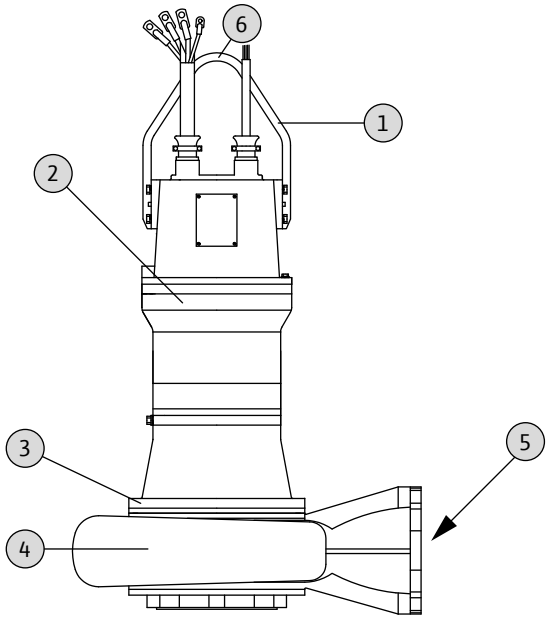

图 (Fig.) 2

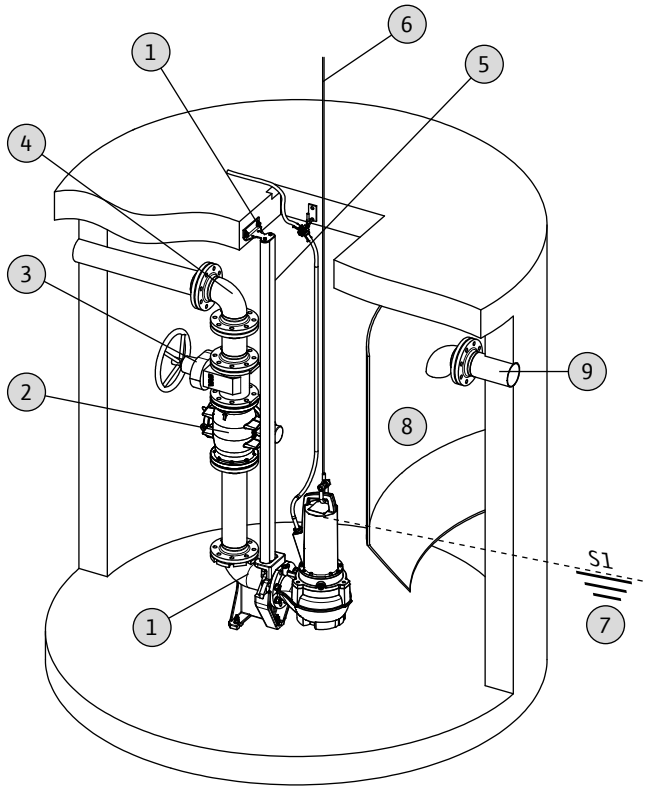

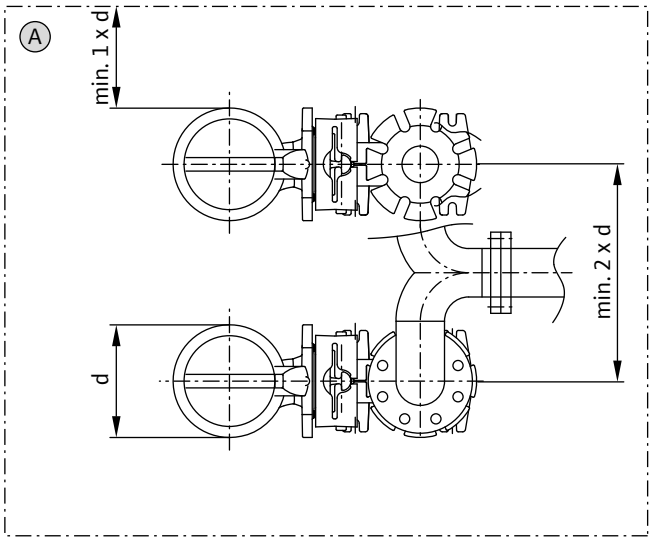

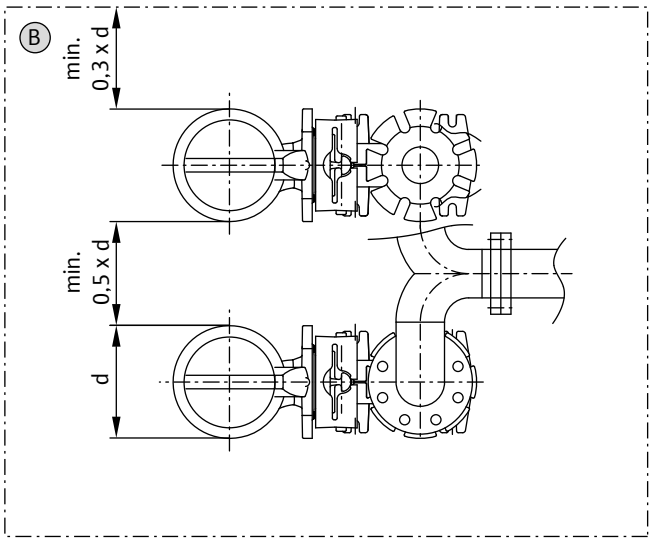

图 (Fig.) 3

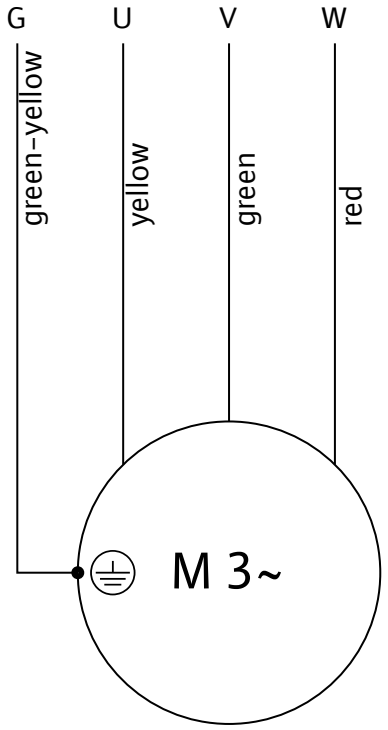

图 (Fig.) 4

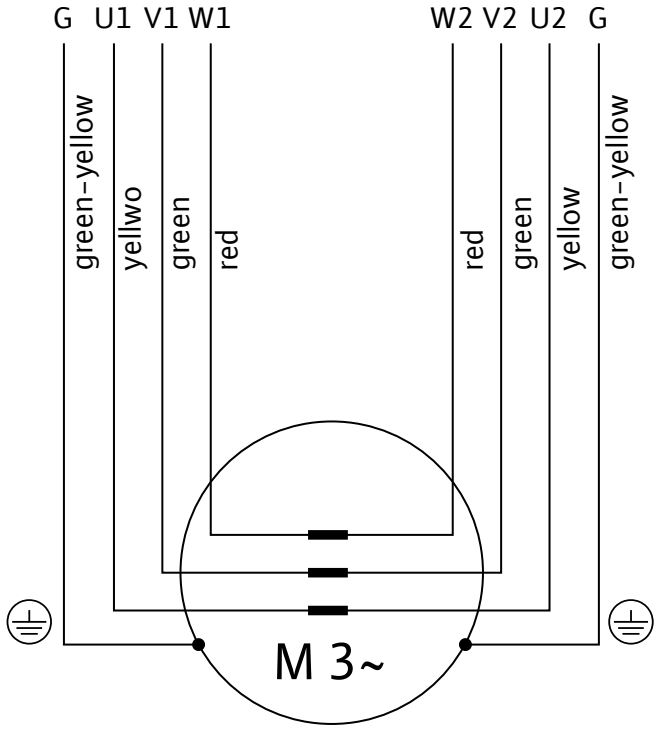

图 (Fig.) 5

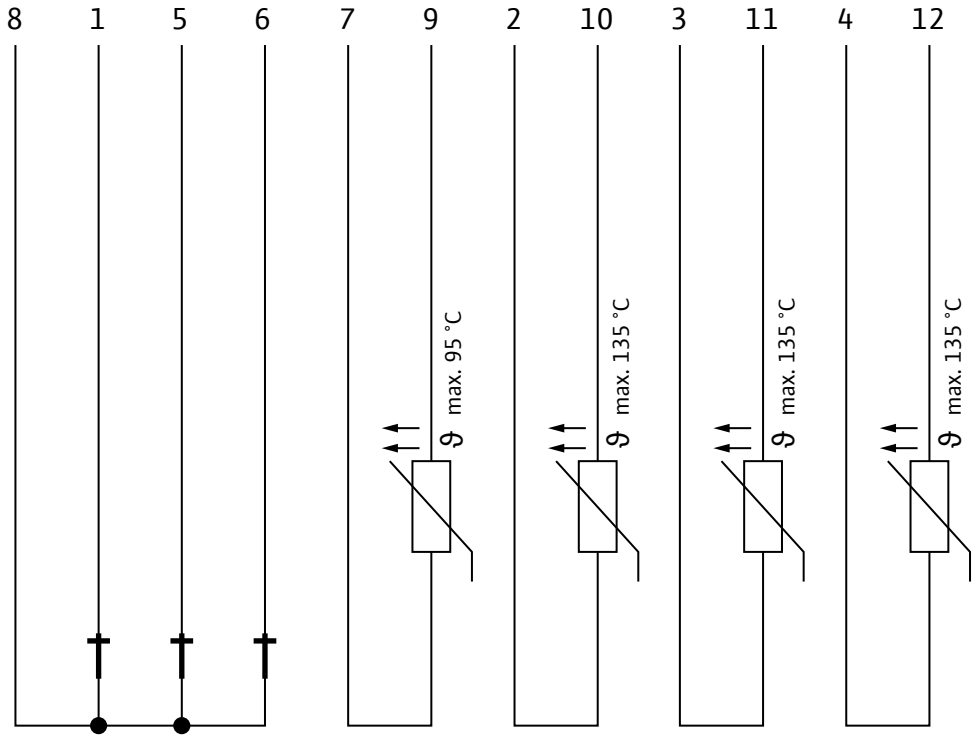

图 (Fig.) 6: SA 25

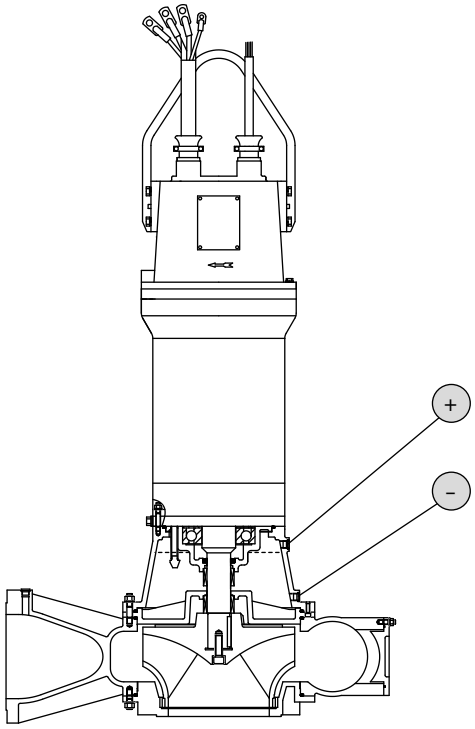

图 (Fig.) 6: SA 35

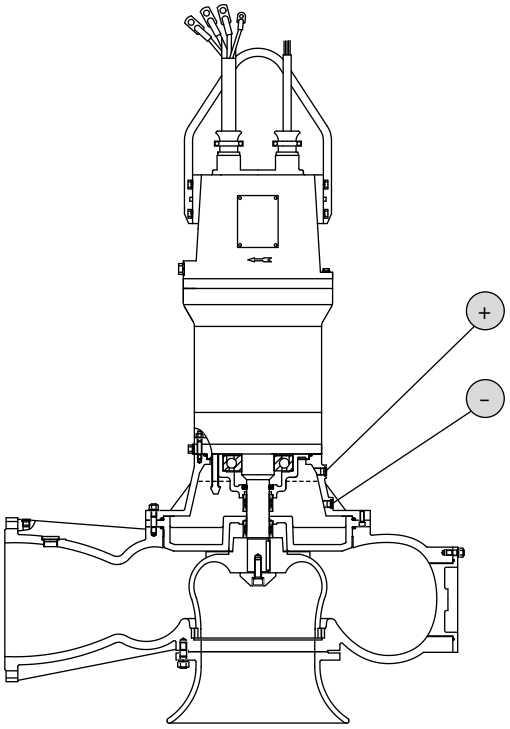

图 (Fig.) 7: SA 25

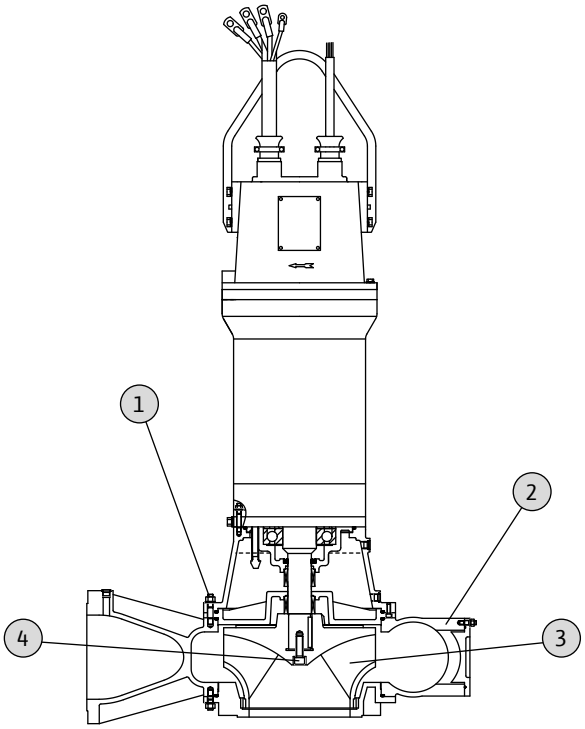

图 (Fig.) 7: SA 35

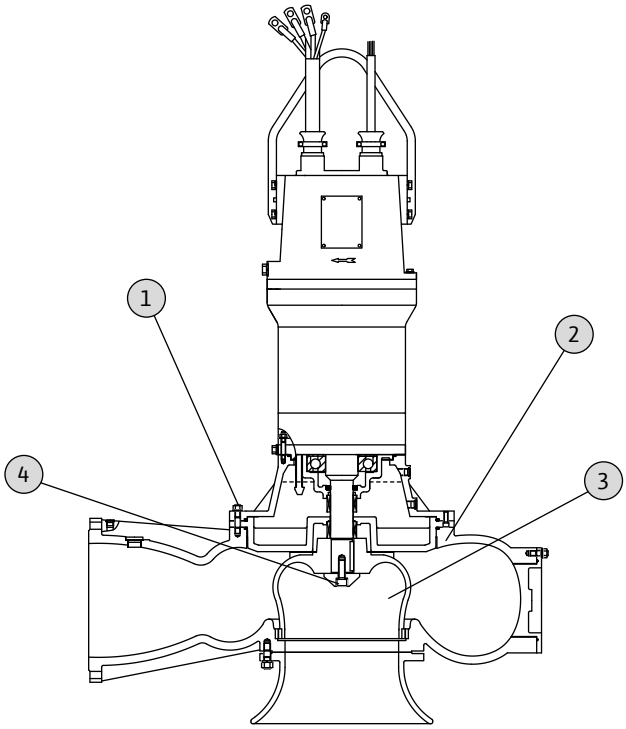

1. 说明

1.1. 关于文档

说明书的原件以英语撰写。所有其他语种的说明书均为其翻译件。

本手册分为目录中所列出的各个章节。每一章节的标题明确描述了该节的内容。

1.2. 工作人员资质

所有从事与泵产品有关的工作人员必须具有相应工作的资质；例如，电气作业仅应由具有资质的电气人员执行。所有工作人员必须已满法定年龄。

操作和维护人员还必须遵守国家事故预防法规。

必须确保工作人员已经阅读并理解本操作和维护手册中的各项说明；必要时，应以所需要的语言版本向制造商订购本手册。

此泵不适于身体、感官或精神能力受限以及不具备相关经验和知识的人员（包括儿童）使用，除非由负责他们安全的人员监督他们并指导他们如何使用此泵。

应照看好儿童，以确保其不会玩耍泵设备。

1.3. 版权

本安装和操作手册的版权归制造商所有。本安装和操作手册仅供安装、操作和维护人员使用。未经制造商的明确同意，其所包含的规定和制图禁止复制或传播（无论全部或部分），也不得用于任何具有竞争性的目的。手册中所采用的示图可能与实物有所不同，仅作为泵设备示意性图示之用。

1.4. 随时变更条款

制造商保留对设备或部件进行技术改进的权利。本安装和操作手册适用于标题页上所示的泵设备。

1.5. 保修

通常情况下，现行《一般条款和条件》中的技术规范适用于保修。如需了解详细信息，请访问：

www.wilo.com/legal

任何偏差均必须经过合同约定并且应予以优先考虑。

1.5.1. 概述

在制造商所出售的泵中若发现存在任何缺陷，只要缺陷符合以下任意一条或多条要求，制造商则有义务纠正此类缺陷：

- 缺陷由所用材料或者产品制造或设计方式导致的。
- 已在协定的保修期限内，以书面形式向制造商报告所发现的缺陷。
- 仅按照规定使用泵设备。
- 所有安全和控制装置的连接和检查工作均由具有资质的人员完成。

1.5.2. 保修期

保修期的期限详见《一般条款和条件》中的规定。

任何偏差均必须经过合同约定。

1.5.3. 备件、加装和改装

仅可使用制造商的原装备件用于维修、更换、加装和改装。未经授权加装和改装或者使用非原装备件可能严重损坏泵设备和/或伤害工作人员。

1.5.4. 维护

应当定期执行规定的维护和检验工作。此类作业只能由具有资质、经过培训并取得授权的人员执行！

1.5.5. 产品损坏

必须由经过培训的人员立即消除危及安全的损坏和故障。仅当泵处于完好工况时方可操作。通常情况下，维修作业仅应由威乐客户服务中心执行。

1.5.6. 免责声明

若泵发生损坏情况，只要使用以下任何一项的内容，则不予保修，也不承担责任：

- 制造商认为运营商或客户所提供的信息不充分或不正确
- 未遵守本安装和操作手册中规定的安全指示和工作指示
- 使用不当
- 未正确存放或运输
- 装配/拆卸不当
- 维护不充分
- 维修不当
- 施工现场或施工不当
- 化学、电化学和电影响
- 磨损

也就是说，制造商的责任概不包括人身伤害、材料损坏或财务损失的所有责任。

2. 安全

本节列出了所有通用的安全说明和技术信息。此外，所有其他章节均包含具体的安全说明和技术信息。在泵使用寿命周期的各个阶段（安装、运行、维护、运输等等）期间，必须遵守并执行所有的说明和信息。运营商应负责确保所有人员遵照上述说明和指导方针。

2.1. 指示和安全说明

本手册以指示和安全说明的形式用以避免人身伤害和财产损害。为便于工作人员明确识别，指示和安全说明区分如下：

- 指示以粗体字显示，直接针对前述文字或章节。
- 安全说明采用略微缩进和粗体形式，始终以警示词开始。
  - **危险**
    可能发生严重或致命人身伤害！
  - **警告**
    可能发生严重人身伤害！
  - 小心
    可能发生人身伤害！
  - 小心（未带符号的说明）
    可能发生实质性财产损害。可能出现无法弥补的损害！
- 针对人身伤害的安全说明采用黑体字，并且始终附有安全标志。危险、禁止或指令标志用作安全标志。

示例：

危险标志：一般危险

危险标志，例如：电流

禁止标志，例如：禁止进入！

指令标志，例如：穿戴防护服

所采用的安全标志符合通用的指令和规章（ANSI）。

- 仅针对材料损坏的安全说明采用灰色文字，没有安全标志。

2.2. 一般安全

- 安装或拆除泵时，不得独自一人在室内或舱内作业。始终应有第二人在现场。
- 在泵上执行任何作业（装配、拆卸、维护、安装）之前，始终应切断其电源。应当将泵与电气系统断开并加以保护，避免被重新接通电源。所有转动部件必须停下来。
- 若出现任何故障或不正常情况，操作人员应立即通知其上级主管。
- 若发生下列存在安全风险的故障，运营商必须立即关闭设备。其中包括：
  - 安全和/或监控设备的故障
  - 重要部件的损坏
  - 电气设备电缆和绝缘的损坏。
- 工具和其他器具应保持在其指定之处，以确保可以随时使用。
- 在密闭室内必须提供充分的通风。
- 当焊接或使用电子设备时，确保没有爆炸的危险。
- 仅使用法定与正式批准的提升装置。
- 提升装置必须予以安全存放，必须适于使用条件（气候、吊挂装置、荷载等）。
- 使用移动设备进行起吊荷载时，在操作期间应当确保其保持稳定。
- 当使用移动设备进行起吊非制导的荷载时，应采取措施以避免倾斜、移位、滑动等。
- 应当采取措施，以确保不会有人在悬吊的荷载正下方。此外，还应禁止将悬吊的荷载移动通过存在人员的工作场所上方。
- 使用移动设备进行提升荷载时，如果需要，应在现场安排第二个人员进行协调工作（例如，操作者视野被阻挡）。
- 吊运待提升的荷载时，必须确保即使出现电力故障也不会导致任何人受到伤害。此外，在户外执行此类作业时，若天气状况变坏，则取消作业。

  必须严格遵守上述指示。若不遵守则可能会导致人身伤害或重大财产损失。

2.3. 电气作业

触电危险！
不正确执行电气作业可能会导致致命伤害！
电气作业只能由具有资质的电工完成。

当心湿气！
渗入电缆的湿气会损坏泵和电缆。切勿将电缆末渗入湿气。未使用的电线必须绝缘！

泵以三相电流运行。必须遵守所在国家的指令、标准和法规以及当地能源供应公司的要求。
泵的操作人员必须知道电源供电之处以及如何切断供电。客户应当为三相交流电机安装电机保护开关。建议安装漏电断路器（RCD）。若人员可能会接触到泵和工作介质（例如：在施工现场），连接线路则必须另外装配漏电断路器（RCD）。
连接产品时，必须遵照《电气连接》章节中的规定。必须严格遵守技术规范。我公司的泵设备始终必须接地。
如果泵已经由保护装置切断电源，在错误得以纠正之前，不得重新接通电源。

当泵连接到电气操作面板上时，尤其是使用软启动控制或频率转换器等电子设备时，必须遵循控制开关制造商的技术规范，以符合电磁兼容性的要求。可能需要为电源和控制电缆采取专门的单独屏蔽措施（例如：屏蔽电缆，滤波器等）。
仅当控制开关符合当地标准时，方可进行连接。移动无线设备可能会造成系统故障。

当心电磁辐射！
电磁辐射对装有心脏起搏器的人员可能会造成致命危险。挂上适当的标牌，并确保所有受影响人员意识到危险性！

2.4. 安全和监控装置

泵配备有下列监控设备：

- 电机室监控
- 电机发热监控器，作为温度限制器（单回路温度监控）
- 监控密封室
- 电机轴承发热监控
- 端子室监控

这些设备必须由电工进行连接，并且在调试之前必须予以检查，确保其运行正常。
有关人员必须了解所安装的系统及其工作原理。

小心！
若监控设备已拆除或已损坏、或者不工作时，切勿运行泵设备。

2.5. 运行期间的安全规则

运行泵时，始终应遵循工作安全、事故预防和电气设备操作方面的当地适用法律和法规。
为确保安全的工作实践，运营商应明确指定员工的职责。所有人员均有责任确保遵守规章制度。

由于其设计原因，离心泵带有易于触及的旋转部件。根据具体运行条件的情况，这些部件上可能会出现锐利边缘。

警告：挤压和肢体切断的危险！
水力系统中的旋转部件上可能会形成锐利边缘。会导致挤压和肢体切断的事故。

- **机器处于运行状态时，切勿将手伸入水力部件中。**
- **执行维护或维修作业之前，应关闭泵，将其从电源线路上断开并加以防护，避免其不会未经授权而被重新接通电源。**
- **始终应令旋转部件停止下来！**

2.6. 工作介质

每种工作介质在成分、腐蚀性、耐磨性、干物质含量以及其他许多方面各有不同。一般情况下，我公司的泵可用于多种应用。请注意，若要求发生变化（密度、粘度或一般成分），则也影响到泵的许多参数。

在不同的工作介质条件下使用或更换泵时，应遵守以下几项要求：

- 如果机械密封存在故障，密封室中的油会污染工作介质。
  严禁在饮用水环境中使用！
- 已在肮脏污水中运行的泵在用于其他工作介质之前必须加以彻底清洗。
- 已在含有粪便和/或对身体有害液体的污水中运行的泵在用于其他工作介质之前必须加以消毒。
  必须明确泵是否完全可以用于其他工作介质。

2.7. 声压

根据泵的规格和容量（kW）的不同，运行期间的声压级大约介于 70 dB（A）至 110 dB（A）之间。

但是，实际声压级取决于多项因素。其中包括安装深度、配置、配件和管路的固定、工况点、潜水深度等。

我们建议，一旦泵在其工况点和所有工作条件下运行后，运营商在工作场所另外进行测量。

注意：佩戴耳塞！
依照适用法律和规章，若声压级大于 85 dB（A），则应佩戴听力保护装置。运营商应负责确保遵守上述规章。

2.8. 所采用的指令

本泵符合本地和统一标准。

3. 产品说明

在泵的制造过程中，我们以极为细致的方式并采取一致的品质控制。若正确安装和维护，则可保证无故障运行。

3.1. 预期用途和应用领域

危险 – 爆炸性液体！
严禁泵送爆炸性液体（汽油、煤油等）。此泵不适于这些液体！

Wilo-Sefa SA... 潜水电机泵适用于断续周期运转和连续运转，泵送以下工作介质：

- 废水（不含粪便）
- 生活污水（含粪便）
- 市政和工业废水
- 密室和水池中干固体含量最高达 8% 的污泥（取决于类型）。

禁止将潜水电机泵用于泵送：

- 饮用水
- 含有石头、木料、金属和沙子等硬质成分的流体
- 纯净的爆炸性或高度易燃性流体。

规定用途也包括应当遵守该手册。任何其他用途均视作不符合规定用途。

3.2. 结构

配备 SI 电机的 Wilo-Sefa SA 能够以固定湿式安装的形式垂直工作。

图 1： 设备说明

1	手柄	4	泵壳
2	电机外壳	5	出水口
3	机械密封腔	6	带卸扣链条的固定点

3.2.1. 水力部件

转子动力水力装置带有流道叶轮，在压力侧采用水平法兰连接形式。

泵为非自吸泵，也就是说，流体必须自动或在提供压力下流入。

3.2.2. 电机

采用干转子电机。电机由其周围流体冷却。余热通过电机外壳直接传递至流体。电机必须在潜水条件下运行。

注
不能在非浸入运行模式下运行电机！

连接电缆有裸露（自由的）电缆端头。标准长度为 12 m，也可按照客户具体要求。

3.2.3. 监控设备

- **电机/端子室监控**
  电机拥有监控电机/端子室的内部电极。如果有水进入电动机室或接线板，则会相应发出信号。
- **电机发热监控器**
  电机发热监控器防止电机绕组过热。为此，使用 Pt100 传感器作为标准。
- **监控密封室**
  电机拥有一个监控密封室的内部铅芯电极。如果有水透过流体侧机械密封进入密封室，其会发出信号。
- **电机轴承发热监控**
  电机轴承发热监控防止电机轴承过热。使用 Pt100 传感器。

3.2.4. 密封件
流体和电机室的密封通过电机侧上以及流体侧上两个单独的机械密封来实现。机械密封之间的密封室充满生态安全型医用白油。

3.2.5. 材料
- 电机外壳：灰口铸铁
- 泵壳：灰口铸铁
- 叶轮：灰口铸铁
- 轴：2Cr13
- 静态密封：NBR
- 机械密封：SiC/SiC

3.3. 在爆炸性环境中运行
不允许在爆炸性环境中运行！

3.4. 运行模式

3.4.1. 运行模式“S1”（连续运行）
该泵可以在额定负载下连续运行而不会超过最高允许温度。

3.5. 技术数据

一般数据	
电源连接 [U/f]：	参见铭牌
功耗 [P_1]：	参见铭牌
额定功率 [P_2]：	参见铭牌
最大扬程 [H]：	参见铭牌
最大流量 [Q]：	参见铭牌
启动类型 [AT]：	参见铭牌
流体温度 [t]：	3...40 °C
防护等级：	IP 68
绝缘等级 [Cl.]：	F
速度 [n]：	参见铭牌
最大潜水深度：	20 m
防爆：	–
运行模式	
潜水式 [OT_S]：	S1
非浸入式 [OT_E]：	–
开关频率	
最大：	6/h，10 分钟间歇
连接	
出水侧：	SA 25...：DN 250/PN 10 SA 35...：DN 350/PN 10
最大通过颗粒直径：	SA 25...：80 mm SA 35...：150 mm

3.6. 型号代码

示例：	Wilo-Sefa SA 25.93M-380A/SI36-6
SA	系列
25	压力接头公称直径，例如 DN 250
93	液压代码
M	叶轮类型： V = 涡流叶轮 C = 流道叶轮 M = 多流道叶轮 T = SOLID 叶轮，闭合 G = SOLID 叶轮，半开
380	特性曲线编号
A	标准材料型号
SI	用于潜水模式工作的潜水电机
36	电气包装公称直径，单位 cm
6	极数

3.7. 供货范围
- 泵，配备 12 m 电缆（标配型式，也可客户指定长度）及自由电缆端
- 安装及操作说明书

3.8. 附件
- 悬架单元
- 液位控制器
- 固定附件和链条
- 开关装置、继电器和插头

附件均为选配件，按要求提供！

4. 运输与存储

4.1. 交付
交付后，立即检查装货是否齐全并且完好无损。如有任何部件受损或丢失，必须在交付当天通知运输公司或制造商。该日期之后所提出的索赔均不予认可。必须在货运文件上记录部件损坏情况。

4.2. 运输
只可以使用适当且经过认可的固定装置、运输和提升装置。这些装置必须拥有足够的承载能力，确保泵得到安全运输。若使用链条，则必须防止滑动。
有关人员必须能够胜任相关任务，并且在工作期间必须遵守所有适用的国家安全法规。
泵由制造商或货运代理公司采用合适的包装进行交付。通常，这可以防止运输和存放期间发生损坏。若产品频繁在不同地点使用，则应将包装放置在安全之处。

4.3. 存放：
对新供应的泵做好准备工作，则至少可以存放一年。在临时存放前，应对泵进行彻底清洁。
存放时应考虑如下事项：
- 将泵放置在结实的表面上并防止滑动或倒落。
废水潜水泵竖直存放。

倒落会发生危险！
切勿将泵在未固定状态下存放。若泵倒落，可能造成伤害！

- 泵可以存放在温度低至 –15°C 的环境中。储存室必须干燥。我们建议存放在温度在 5 °C 和 25 °C 之间的防冻室内。
- 在存放前应封闭所有抽吸或出水口，防止污染物。
- 应防止电源电缆缠结、受损或受潮。

触电危险！
受损的电源电缆可能造成致命伤害！损坏的电缆必须由专业电工立即更换。

当心湿气！
渗入电缆的湿气会损坏泵和电缆。切勿将电缆末渗入湿气。

- 必须避免泵受到阳光直射、受热、受到尘土污染或受冻。
- 每隔一段时间必须转动叶轮。这可防止轴承卡住，并且更新机械密封上的润滑油膜。

当心锐利边缘！
叶轮和水力部件端口上可能形成锐利边缘。存在人员伤害的风险！穿戴必要的防护服，例如，安全手套。

- 若泵已经存放很长一段时间，则应在试运行前清除灰尘或油积垢等杂质。应检查叶轮是否正常运转。应检查壳体涂层是否受损。
  在试运行前，应检查密封室内的充注液位；如有必要，予以加满！

  受损的涂层应立即修复。只有完好无损的涂层才符合规定用途的标准！

  请注意，弹性橡胶部件和涂层经过一段时间会变脆！若产品需要进行六个月以上的存放，我们则建议检查这些部件；必要时，对其予以更换。详细资料请咨询制造商。

4.4. 退货交付

退回工厂的泵必须进行适当包装。也就是说，已经将杂质清除，并且，如果已用于危害健康的流体，则应当已进行过净化处理。

装运时，部件必须采用大小合适的防撕裂塑料袋加以包装，保证其密封严实并防漏。此外，包装必须避免泵在运输过程中受损。如有任何问题，请联系制造商！

5. 安装

为防止在安装过程中产品受损或产生严重人员伤害，必须遵守如下几点：

- 安装作业 – 泵的组装和安装 – 仅应由专业人员执行。必须始终遵守安全说明。
- 在实施任何安装作业前，必须检查是否存在运输损坏。

5.1. 概述

污水系统技术的规格和运行需要遵守当地相关的法规和指令。

请注意，可能会发生压力波动，尤其是在使用较长排放管泵水的固定式安装时（特别是在稳定爬坡或陡峭地形情况下）。

压力波动可能会毁坏泵或系统，并且会因阀瓣撞击产生噪音污染。可以通过采用适当措施来防止压力波动（例如，带有可调式关闭时间的止回阀，或排放管线的特殊走线）。

若正在使用液位控制，则要确保最低水位覆盖面。必须尽力避免壳体或管路系统中的气泡，并且必须采用适当的通风系统和/或以小角度放置泵（如果安装作为轻便泵）来去除这些气泡。防止泵发生霜冻。

5.2. 安装方法

- 带悬架单元的垂直固定式湿式安装

5.3. 安装

小心坠落！
在安装泵及其附件时，有时需要直接在水池或密室边缘作业。粗心大意或穿着不当可能发生坠落。这存在致命伤害的风险！采取所有必要的安全预防措施来避免发生此类危险。

在安装泵时，应注意遵守如下事项：

- 该作业必须由专业人员进行，而电气作业则应由电工进行。
- 收集池必须清洁，没有粗糙固态物，干燥并且防霜冻，如有必要，应予以去污。而且水池也必须适用于特定的泵。
- 在密室中作业时，出于安全考量，必须安排第二个人在场。若可能产生有毒或窒息性气体，则必须采取必要的防护措施。
- 装置规划人必须根据运转时的周围环境来相应选择密室的大小和电机冷却时间。
- 确保提升装置安装方便，因为这对于泵的组装和拆卸十分必要。必须确保可以使用提升装置安全接触到运转和存放位置上的泵设备。设备必须定位在结实的支撑表面上。运输泵时，必须将承载设备固定到提供的提升吊眼上。使用链条时，必须使用卸扣将其连接至提升吊眼或手提柄上。提升装置必须经过技术验证。
- 电源电缆的布线方式必须确保始终能够实现安全运转和无故障组装/拆卸。切勿使用电源电缆搬运或拖拉泵设备。检查电缆长度是否足够适于其横截面及其安装类型。
- 使用控制开关时，必须遵守相应的防护等级。通常，控制开关需要安装在潜在爆炸性区域之外，并且安装方式必须防止进水。
- 结构构件和底座应有足够的稳定性，可使产品牢固固定。运营商或供应商负责提供底座，并且确定其具有合适的大小、稳定性和强度。
- 绝不允许泵干运转。水位不得低于最低水位。因此，在水位变化较大之处，建议安装液位控制系统或干转保护系统。
- 对流体吸入口使用导板和偏转板。若吸水高度接近水的表面，会有气体进入流体，而这些气体可能积聚在管道系统内。这可能导致运行工况不当，并导致整个系统停用。

- 检查可用的咨询文档（安装图、收集池布局、进水速比）是否齐全且正确。
- 在操作重型悬垂负载，或者在重型悬垂负载下方作业时，请遵守所有规章、规则和法律规定。穿戴合适的防护服/设备。
- 同时，请遵守适用的国家事故防范条例和行业协会安全规定。

5.3.1. 维护工作

存放超过六个月之后，在安装前，必须执行如下维护工作：

- 旋转叶轮
- 检查密封室内的油位

旋转叶轮

1. 将泵设备水平放置在结实的表面上。
   确保泵不会倒落和/或滑动。
2. 从下方小心缓慢地进入水力部件壳体，旋转叶轮。

当心锐利边缘！
叶轮和水力部件开口上可能形成锐利边缘。存在人员伤害的风险！穿戴必要的防护服，例如，防护手套。

检查密封室内的油位

密封室上有一个用于密封室排放和填充的孔。

1. 将泵设备水平放置在结实的表面上，螺旋塞朝上。
   确保泵不会倒落和/或滑动。
2. 旋松螺旋塞。
3. 油位应该达到旋塞孔之下的大概 1 cm 处。
4. 若密封室内油不够，则予以加满。注油时，请遵照“维护和维修”一章“换油”的说明。
5. 清洁螺旋塞，如果必要，更换密封环，然后将其旋回。

5.3.2. 固定式湿式安装

湿式安装时，必须为其安装一个悬架单元。而这必须单独订购。出水侧的管道系统连接至此。

该连接的管道系统必须是自支撑式，也就是说，不能由悬架单元进行支撑。

该操作区的布置必须确保悬架单元能够得以方便安装和运转。

不允许使用非浸入式电机操作。

图 **2**：固定式湿式安装

1	悬架单元	6	链条*
2	止回阀	7	最低水位
3	闸阀	8	偏转板
4	肘形弯头	9	入口
5	导管*		
A	并列运行的最短距离		
B	交错运行的最短距离		

* 由客户提供！

工作步骤

1. 悬架单元安装：大约 1–2 h
   （请参考悬架单元操作手册）。
2. 为在悬架单元上运行的泵设备做准备工作：大约 <1 h
   （请参考悬架单元操作手册）。
3. 安装泵设备：大约 1–2 h
   - 检查悬架单元是否安装牢固并功能正常。
   - 使用卸扣将提升装置固定到泵上，提起泵，然后慢慢放下至操作区域的导管处。
   - 放下时，轻轻拉紧电源电缆。
   - 泵连接至悬架单元后，确保电源电缆充分固定，避免其掉落或受损。
   - 由专业电工进行电气连接。
   - 出水口由其自身重量进行密封。
4. 安装选装附件，例如，干转保护或液位控制器。
5. 启动泵设备：大约 1 h
   - 详见“试运行”章节所述
   - 对于新安装：用水注满操作区
   - 排空压力管。

5.3.3. 液位控制

充注液位可以使用液位控制系统来确定，也就是说将泵设备自动接通和关闭电源。可以使用浮子开关、压力和超声波测量，或液位传感器来记录充注液位。

请注意如下信息：

- 使用浮子开关时，确保其可在操作区内自由移动。
- 水位不得低于最低水位！
- 不得超过单位小时最多启动次数！
- 若充注液位强烈波动，则应在两个测试点上设置液位控制作为标配。这就可以获得较大的切换差。

安装

要正确安装，请参考液位控制装置的安装和操作手册。

遵照单位小时最多启动次数和最低水位相关的信息！

5.4. 干转保护

确保没有空气进入水力部件壳体。因此，泵必须始终潜入流体内，流体表面淹没壳体的顶部边缘。为最大程度增加可靠性，建议安装干转保护系统。

由浮子开关或液位传感器确保正确运转。浮子开关或液位传感器安装在密室里，在水位降至最低覆盖水位以下时会关闭泵设备。若在充注液位出现明显偏差的情况下，仅使用一只浮子开关来执行干转保护，泵则可能会经常在开、关之间来回切换！这会导致超过电机启动的最大次数（开关切换循环）！

5.4.1. 避免过多开关切换循环的纠正良措施

- 人工复位
  当水位降至最低覆盖水位以下时，电机会关闭，并在恢复至充分水位后重新接通电源。
- 单独的关闭点
  采用第二个开关切换点（另外的浮球开关或电极）来获得充分的启动和关闭差值。这可避免不断切换开关。该功能可由液位控制继电器执行。

5.5. 电气连接

触电危险！
不当电气连接可能导致致命的电击事故。电气连接仅应由经过当地供电商认可的专业电工依照当地适用条例进行。

- 电源连接的电压和电流必须符合铭牌上的规定。
- 根据适用标准和规定并依照导线的分配规定连接电源电缆。
- 必须连接并测试所有可用的监控设备，例如，电机发热检测，确保其工作正常。
- 对于三相交流电机，必须存在顺时针旋转磁场。
- 对泵进行正确接地。
  永久性安装的泵设备必须按照当地标准进行接地。若有一根单独的接地导线，则必须使用适当的螺丝、螺母、带齿垫圈和平垫圈将其连接至标记的孔或接地线端（⏚）。接地导线连接电缆的横截面必须符合当地规定。
- **带自由电缆端的电机必须使用电机保护开关。**
  建议使用漏电断路器（RCD）。
- 开关装置必须作为附件购买。

5.5.1. 首次调试之前或长时间存放之后，检查电机绕组和监控设备

如果测量值与技术规格存在差异，水可能已渗透到电机或电源线，或者监控装置可能出现故障。请不要连接泵，并立即咨询 Wilo 客户服务。

电机绕组的绝缘电阻
在连接电源线之前，绝缘电阻必须进行测试。可以使用绝缘测试仪（测量电压 = 500 V）来测量。

- 首次调试：绝缘电阻不得低于 50 MΩ。
- 对于进一步的测量：测量值必须大于 2 MΩ。

温度传感器和电极
连接监控装置之前，应使用绝缘测试仪进行检测（测量电压= 2.5 VDC）。应符合如下参数值：

- Pt100 传感器：Pt100 传感器在 0 °C 时的值为 100 Ω。在 0 °C 至 100 °C 时，该值每 1 °C 增加 0.385 Ω。环境温度为 20 °C 时，该值达到 107.7 Ω。
- 电极：该值必须接近 2 MΩ。若参数值低于 33 kΩ，则油或电机/端子室中有水。同样要遵守可选的评测继电器的说明。

5.5.2. 电源保险丝

备用保险丝必须符合起动电流的额定值额。可在铭牌上找到起动电流。
只有缓动式熔断器或 K 特性自动断电装置可用作备用保险丝。

5.5.3. 三相交流电机

三相电流类型提供有自由电缆端。在开关盒终端处将其连接至电源。
仅应由专业电工进行电气连接。

图 3： 直接启动方式的电机接线图

一条电机电缆	
U	黄色（YE）
V	绿色（GN）
W	红色（RD）
G	绿黄色（GN–YE）

图 4： 星形–三角形启动方式的电机接线图

两条单独的电机电缆		
U1	黄色（YE）	第一条电源电缆
V1	绿色（GN）	
W1	红色（RD）	
G	绿黄色（GN–YE）	
U2	黄色（YE）	第二条电源电缆
V2	绿色（GN）	
W2	红色（RD）	
G	绿黄色（GN–YE）	

5.5.4. 监控装置连接

必须始终连接所有监控装置！

图 5： 监控装置接线图

控制电缆，12 芯线	
1 8	端子室监控
5 8	电机室监控
6 8	监控密封室
7 9	电机轴承温度监控
2 10	电机温度监控，第一相线
3 11	电机温度监控，第二相线
4 12	电机温度监控，第三相线

电机/端子室监控
电机/端子室监控（湿度传感器）必须经由评测继电器进行连接。极限值为 33 kΩ。
当达到极限值后，装置必须关闭。

电机温度监控
电机发热监控由 Pt100 传感器执行。必须通过评测继电器进行连接。极限值为 135 °C（152 Ω）。当达到极限值后，装置必须关闭。
为此，对于因电机监控不当导致的任何绕组损坏所提出的保修申请概不接受。

监控密封室
密封室由湿度电极进行监控。必须通过评测继电器进行连接。
推荐极限值为 33 kΩ。当达到极限值后，必须发出警告，或必须关闭装置。

小心！
若发出警告，则泵可能由于进水而造成不可弥补的损坏。我们始终建议关闭！

电机轴承温度监控
电机轴承发热监控由 Pt100 传感器执行。
必须通过评测继电器进行连接。极限值为 95 °C（136 Ω）。当达到极限值后，装置必须关闭。

5.6. 电机保护和启动类型

5.6.1. 电机保护
带自由电缆端的电机其最低要求是一个带温度补偿、差值触发的热继电器/电机保护开关以及一个防重启装置。
若将泵连接至经常发生故障的电气系统上，则建议在客户处安装另外的防护装置（过压、欠压或断相继电器、避雷装置等等）。还建议安装一个漏电断路器（RCD）。
在连接泵设备时，必须遵守地方和国家法规。

5.6.2. 启动类型

直接启动
满负荷运行时，电机保护应设定至铭牌上所示的额定电流。
部分负荷运行时，建议将电机保护设置在工况点处所测得电流之上的 5%。
可能超过额定电流！

星角启动
电机保护设置取决于具体安装：
- 电机保护安装在电机线路中：将电机保护设置到 0.58 × 额定电流。
- 电机保护安装在主电源电缆中：将电机保护设置到额定电流。

星形连接方式的最大启动时间为 3 秒。

启用软启动
- 满负荷运行时，电机保护应设定至工况点处的额定电流。部分负荷运行时，建议将电机保护设置在工况点处所测得电流之上的 5%。
- 在整个运行期间，电流消耗必须低于额定电流。
- 由于是上游电机保护，电机应在 30 秒内启动和停止。
- 为在运行期间避免功率损耗，在正常运行后，应将电子启动器（软启动）旁路。

5.6.3. 使用变频器运行
不允许在变频器上运行！

6. 试运行
“试运行”章节中包含操作人员启动和操作泵设备的所有重要说明。

必须遵守并监控如下条件：
- 安装类型
- 运行模式
- 最低潜水深度 / 最大潜水深度

若泵在较长一段使其没有运行，也应检查这些条件并纠正发现的任何缺陷！

始终将本手册妥善存放在泵设备旁边，或专门指定之处，使得所有操作人员可以随时获取。
为防止在泵试运行时设备损坏或人员严重伤害，必须遵守如下几点：
- 泵必须由专业人员进行试运行。必须始终遵守安全说明。
- 所有泵设备操作人员必须已经收到、阅读并理解本安装和操作手册。
- 必须连接所有安全装置和紧急断电装置，然后进行检查，确保其正常运行。
- 必须由专业人员进行电气和机械调整。
- 泵适于在规定的操作条件下使用。
- 泵的工作区域不是娱乐场所，需要清空人员！启动或运行时，工作区不得有人。
- 在密室中作业时，出于安全考量，必须安排第二个人在场。如果可能存在有毒气体危险，则必须确保充分通风。

6.1. 电气系统
按照“安装”章节所述并且遵照 VDE 指南和适用的国家规范来连接泵并安装电源电缆。
必须对泵进行适当保护和接地。
注意旋转方向！若旋转方向不对，则泵不会按说明运行，并且可能受损。
确保已连接并检测所有监控装置。

触电危险！
若处理不当，电流可能造成致命伤亡！所有带自由电缆端（即，没有插头）的泵必须由专业电工进行连接。

6.2. 旋转方向监控
在工厂对泵设备进行检查和调整，确保旋转方向正确。必须根据接线标识进行连接。
必须在常规操作条件下进行试运行！

6.2.1. 检查旋转方向
必须由本地电工使用旋转磁场测试仪来检查旋转方向。必须存在顺时针旋转磁场，才表示旋转方向正确。
如果是逆时针旋转磁场，则不得运行泵设备！

6.2.2. 旋转方向不正确
如果直接启动电机的旋转方向不正确，则必须调换两个相位。对于星形三角型电机，必须调换两个绕组的连接，例如，U1 调为 V1 以及 U2 调为 V2。

6.3. 液位控制
应检查液位控制装置，确保其正确安装，并且要检查开关点的设置。如需了解所要求的信息，请参阅液位控制装置的安装和运行说明以及咨询文档。

6.4. 在潜在爆炸性环境中运行
不允许在潜在爆炸性环境中运行！

6.5. 试运行

交付时，若机械密封发生轻微漏油，不必为此担心。但是，在潜入流体前必须将其清除。
请勿靠近泵工作区。启动或运行时，工作区不得有人。

警告：碾压危险！
在便携式装置中，在接通电源时或运行期间，泵可能会倒落。确保泵放置在结实的支撑表面上，泵座正确安装。

若泵已倒落，在再次竖立之前，必须切断泵的电源。

6.5.1. 预调试

在预调试阶段前，必须检查如下几点：
- 按照“安装”章节所述检查安装。
- 按照“维护”章节所述进行绝缘检查。
- 检查液位控制装置的开关液位。

6.5.2. 通电之前

致命的爆炸危险
若在运行期间，进水侧和出水侧的截止阀关闭，则壳体内的流体会因泵运转而升温。因受热在泵壳中产生相当大的压力。压力可能导致泵发生爆炸！在打开装置上的开关前，确保所有的闸阀是打开的，并打开任何封闭的闸阀。

检查如下事项：
- 电缆导向 – 无打结，稍微拉紧
- 检查流体温度和潜水深度 – 参见“技术数据”章节
- 需要从泵井内清除所有粗糙的污染物，尤其是沙砾/石块、金属和石头等固体物。
- 清洁压力端的管道系统。
- 开启压力端上的所有闸阀。
- 流体必须至少达到水力部件壳体的吸入口位置。
- 必须使用系统内合适的排气装置对管道系统进行排气。
- 检查所有附件是否安装正确。
- 检查所有液位控制和干转保护系统

6.5.3. 通电时

使用客户提供的单独工况点（开/关开关、控制开关）手动打开和关闭泵设备的电源。自动运行必须安装独立的液位控制装置。

6.5.4. 通电之后

启动时会短暂超过额定电流。一旦完成启动后，工作电流可能不会再超过额定电流。
若在泵通电后，电机没有立即启动，则必须立即关闭。再次启动前，必须遵守“技术数据”章节中所规定的启动间歇时间。若再次出现故障，则应再次立即关闭泵设备的电源。应在故障纠正后再重新启动泵设备。

6.6. 运行期间的安全规则

致命的爆炸危险
若在运行期间，进水侧和出水侧的截止阀关闭，则壳体内的流体会因泵运转而升温。因受热在泵壳中产生相当大的压力。压力可能导致泵发生爆炸！在打开装置上的开关前，确保所有的闸阀是打开的，并打开任何封闭的闸阀。

注意旋转部件！
旋转部件可能会碾压或切断四肢。切勿在运行过程中接触水力部件或旋转部件。
- **执行维护或维修作业之前，应关闭泵，将其从电源线路上断开并加以防护，避免其不会未经授权而被重新接通电源。**
- **令旋转部件停下来！**

运行泵时，始终应遵循工作安全、事故预防和电气设备操作方面的当地适用法律和法规。
为确保安全的工作实践，运营商应明确指定员工的职责。所有人员均有责任确保遵守规章制度。
泵拥有旋转部件。在运行期间，这些部件会转动来泵送流体。泵送的流体内的某些物质可能会在旋转部件上形成锐利边缘。
应定期检查如下事项：
- 工作电压（允差为额定电压的 +/–5%）
- 频率（允差为额定频率的 +/– 2%）
- 电流消耗（相位之间的允差为最大值的 5%）
- 各个相位之间的电压差（最大 1%）
- 单位小时启动和停机次数（参见“技术数据”章节）
- 对于入口防止进入空气，如有必要，应安装一个偏转板。
- 最低潜水深度、液位控制装置、干转保护
- 平稳运行
- 入口和出口压力管内的截止阀必须开启。

6.6.1. 极限范围内运行

如有必要，泵可在极限范围内短暂运行。但是必须严格遵守如下参数：
- 工作电压（允差为额定电压的 +/–10 %）
- 频率（允差为额定频率的 +3 至 –5%）
- 各个相位之间的电压差（最大 1%）

不建议在极限范围内连续运行，因为泵会发生更多磨损，并且故障风险也会增加。

7. 拆除/处置

- 必须谨慎执行所有作业。
- 必须穿戴合适的防护服。
- 在水池和/或罐槽内执行作业时，必须始终遵守相应的本地保护措施。出于安全考量，必须安排第二个人在场。
- 只有技术完善的提升装置以及经过正规认证的承载设备方可用于起降泵设备。

由于故障导致的致命伤亡风险！
承载和提升装置必须处于完好技术状况。仅应在已检查提升装置并且确定处于其完好工作状态后，方可开始作业。若未经检查，可能导致致命伤亡事故。

7.1. 临时拆除

对于这类停用，泵仍然保持安装并且供电尚未切断。对于暂时拆除，泵必须保持完全潜水状态，防止霜冻。确保流体和工作区的温度不低于 +3°C。

这会确保泵始终处于待运行状态。对于长时间的停用，应定期（按每月到每季度）进行 5 分钟的功能测试。

小心！
仅应在正确的运行和使用条件下进行功能运转。绝不允许机器干运行！这可能导致不可修复的损坏！

7.2. 因维护或存放而拆除

电工必须关闭系统电源，切断泵电源连接，并防止未经许可再次接通电源。带插头的泵必须拔掉插头（请勿拉电缆！）然后即可开始拆卸、维护和存放。

当心有毒物质！
应在执行任何其他作业前，对泵送有害健康的流体的泵进行净化处理！否则，存在致命伤害的风险！进行这项作业时应穿戴必要的防护服！

当心烫伤！
壳体组件温度可能上升到 40°C 以上。存在烫伤风险！关闭后，令泵冷却到环境温度。

7.2.1. 拆卸

使用合适的提升装置将带悬架单元的固定式湿式安装的泵从坑内提出。提升时，始终轻轻拉紧电源电缆，防止受损。

不必为此专门清空工作区。入口和出口压力管的截止阀必须关闭，防止工作区溢流或排放管倒空。

7.3. 退货交付/存放

装运时，部件必须采用大小合适的防撕裂塑料袋进行包装和密封，防止泄露。

有关退货交付和存放信息，也请参阅“运输与存放”章节！

7.4. 处置

7.4.1. 润滑油

油和润滑油必须收集在适当的容器内，根据适用的地方法律进行处置。

7.4.2. 防护服

清洁和维护作业后，应根据适用的地方法律处置所穿戴的防护服。

7.4.3. 产品

正确处置该产品，避免污染环境或危害人身健康。

- 利用公有或私有废物处置公司的服务，或向其咨询产品及其部件的处置方法。
- 有关正确处置的更多信息，可以向市政主管机构、废物处置管理机构，或购买产品的供应商处索取。

8. 维护

触电危险！
在电气装置上执行作业时，存在致命电击事故的风险。对于所有维护或维修作业，必须切断泵的电源并防止未经许可再次接通电源。仅应由专业电工修理损坏的电源电缆。

- 在进行维护或维修作业前，请按照 **“拆除/处置”** 章节所述关闭并拆卸泵设备。
- 在完成维护或维修作业后，应根据**“安装”**章节安装和连接泵设备。
- 应按照 **“试运行”** 章节所述打开泵设备。

请重视如下信息：

- 所有维护和维修作业必须由 Wilo 客户服务中心、授权的维修服务中心，或经过培训的专业人员在安全的工作场所谨慎实施。必须穿戴适当的防护服。
- 应向维修人员提供本手册，并且必须遵守其说明。仅可以执行本说明书所列出的维护和维修作业。

  进一步的作业和/或结构性改动只能由 Wilo 客户服务中心实施。

- 在水池和/或罐槽内执行作业时，必须始终遵守相应的本地保护措施。出于安全考量，必须安排第二个人在场。
- 只有技术完善的提升装置以及经过正规认证的承载设备方可用于起降泵设备。泵提升或下放时，确保泵不会卡住。如果泵确实被卡住，则提升力不得超过 1.2 x 泵重量！切勿超出最大承载能力！

  确保提升装置的所有固定装置、绳索和安全装置状况良好。仅应在已检查提升装置并且确定处于其完好工作状态后，方可开始作业。若未经检查，可能导致致命伤亡事故。

- 泵设备和系统上的电气作业只能由电工完成。必须更换故障保险丝。切勿尝试将其修复！仅可以使用规定电流和指定类型的保险丝。
- 使用易燃溶液和清洁剂时，禁止用火、明灯或吸烟。
- 必须对泵送有害健康的液体或与这些液体进行接触的泵进行净化处理。应确保不会产生或出现危险气体。
- 若发生与危险液体或气体相关的受伤事故，必须按照工作场所的告示实施抢救措施，并且应立即通知医生。
- 润滑油，如油和油脂，必须收集在适当的容器内，并且根据适用的地方法律进行处置。

  仅可以使用制造商明确推荐的润滑油。不得混合油和润滑油。
- 仅使用制造商生产的正品部件。

8.1. 润滑油

8.1.1. 白油概述

密封室充注有可生物降解的白油。

建议使用如下型号的油品进行换油：

- Aral Autin PL*
- Shell ONDINA 919
- Esso MARCOL 52* 或 82*
- BP WHITEMORE WOM 14*
- Texaco Pharmaceutical 30* 或 40*
  根据“USDA–H1”，所有标记“*”的油品型号均可以用于食物。

密封室填注量
- SI 36 电机及液力装置 SA 25…：24 l
- SI 36 电机及液力装置 SA 35…：34 l

8.1.2. 油脂概述
可用如下型号的油脂：
- Esso Unirex N3

8.2. 维护间隔
为确保可靠运行，必须定期执行各种维护作业。
必须根据泵的需求来确定维护间隔。若运行期间发生剧烈振动，则必须立即检查泵设备或安装，而无需考虑维护间隔时间。

8.2.1. 正常工作条件时的间隔时间

4000 工作小时
- 电源电缆目视检查
- 附件目视检查
- 壳体磨损目视检查
- 所有安全和控制装置功能检查
- 在用开关装置/继电器的检查
- 更换密封室内的油

15,000 个工作小时，或 10 年后，以较早时间为准。
- 大修

8.2.2. 恶劣工作条件时的间隔时间
对于恶劣工作条件，规定的维护间隔时间应相应缩短。如果是这种情况，请联系 Wilo 客户服务中心。如果在恶劣条件下使用泵设备，则建议您订立维护合同。
如下条件被视为恶劣工作条件：
- 流体内存在大量纤维物质或沙砾/石块
- 紊流吸入（例如，由进气或气蚀造成）
- 高度腐蚀性液体
- 高含气量的液体
- 不利的工况点
- 在水锤风险下运行

8.2.3. 确保平稳运转而建议进行的维修任务
建议在各个阶段定期检查电流消耗和工作电压。这些参数值应在正常运行期间保持恒定。轻微波动是缘于泵送液体的组成成分。电流消耗可有助于及早检测并校正叶轮、轴承和/或电机内的损坏和/或故障运行。更大的电压波动会损坏电机绕组，可能导致泵设备故障。因此，定期检查可以防止之后发生更大损坏，降低整体故障的风险。建议采用远程监控进行定期检查。相关信息，请联系 Wilo 客户服务中心。

8.3. 维护作业
在进行维护前：
- 切断泵的电源并加以固定，避免意外启动。
- 令泵设备冷却，进行彻底清洁。
- 必须立即清理所有液滴！
- 确保所有运行部件处于完好状态。

8.3.1. 电源电缆目视检查
必须检查电源电缆有无气泡、裂缝、划痕、磨损区域和/或碾压部分。若发现损坏，则必须立即关闭泵并更换受损电源电缆。
只有 Wilo 客户服务中心、或经授权的/经认证的服务中心方可更换电缆。在损坏部位得到充分修复前，不得再次使用泵设备。

8.3.2. 附件目视检查
检查附件是否正确安装并且运行正常。应该立即修理或更换松动和/或有缺陷的附件。

8.3.3. 壳体磨损目视检查
壳体部件不得受损。如壳体发现可见损坏，请咨询 Wilo 客户服务中心。

8.3.4. 安全和监控装置功能测试
监控装置包括电机内的温度传感器、密封室监控器、过载继电器、过压继电器等。
- 过载继电器和其他跳闸装置在进行测试时通常可以通过手动触发。
- 如需检查电极或温度传感器，泵必须冷却至环境温度，并且控制开关内监控装置的电源电缆必须断开。然后可以用绝缘测试仪测量监控装置的电阻（测量电压= 2.5 V（DC））。
  应测量如下参数值：
  - Pt100 传感器：Pt100 传感器在 0 °C 时的值为 100 Ω。在 0 °C 至 100 °C 时，该值每 1 °C 增加 0.385 Ω。环境温度为 20 °C 时，该值达到 107.7 Ω。
  - 电极：该值必须接近 2 MΩ。若参数值低于 33 kΩ，则油或电机/端子室中有水。同样要遵守可选的评测继电器的说明。

8.3.5. 在用开关装置/继电器的检查
有关检查开关装置/继电器的程序，请参阅相应的操作手册。必须立即更换有问题的装置，因为其无法确保安全的泵运行。

8.3.6. 更换密封室内的油
密封室上有两个单独的孔，用于密封室排放和填充。

当心炙热和/或高压油造成伤害！
关闭泵电源后，油仍然炙热，并且受压。这可能挤出螺旋塞，使热油溢出。存在人员伤害或烫伤的风险！首先让油冷却至室温，并始终缓慢拧开螺旋塞。

图 6： 密封室上的堵塞

–	排放孔螺旋塞
+	加注孔螺旋塞

1. 将泵设备水平放置在结实的表面上，堵塞朝上。
   确保泵不会倒落和/或滑走！
2. 卸下塑料盖（如果存在），小心并慢慢旋开堵塞（– 和 +）。

3. 转动泵，直至开口朝下，排放润滑油。将润滑油收集在合适的容器内，根据“处置”章节要求进行处理。
4. 将泵转回，直至开口再次朝上。
5. 清洁堵塞（–），装上新密封环安装，并再次旋入。
6. 通过堵塞（+）内的开口倒入新的润滑油。油位必须达到开口的下缘。仅使用建议的润滑油。
7. 清洁堵塞（+），装上新密封环安装，并再次旋入。
8. 安装塑料盖（如果存在），涂上耐酸密封剂。

8.3.7. 大修

在大修期间，除常规的维护作业外，还需要检查并更换电机轴承、轴封、O 型环和电源电缆。该作业只能由制造商或授权的维修服务中心来进行。

8.4. 维修

进行维修时，必须：

- 切断泵的电源并加以固定，避免意外启动。
- 令泵设备冷却，进行彻底清洁。
- 确保所有运行部件处于完好状态。
- 始终更换 O 型环、密封和螺丝紧固件（垫圈、Nord Lock 锁紧垫圈）。
- 必须遵守规定的拧紧扭矩。
- 在该作业期间，切勿使用蛮力！

8.4.1. 使用螺钉锁紧

所有螺钉通常都有一定锁紧功能。在拆卸后始终予以更换。

锁紧螺钉的方法如下：

- 液体螺钉粘结剂，例如，Loctite 243
- 使用 Nord Lock 锁紧垫圈进行机械螺钉锁紧

液体螺钉锁紧

液体螺钉锁只有通过加热（至大约 300 °C）才能松开。相关部件必须彻底清洁，并且在重新装配时涂上一层粘结剂。

机械螺钉锁紧

“Nord Lock”锁紧垫圈通常仅用于强度等级 10.9 的 Geomet 涂层螺钉。

“Nord Lock”锁紧垫圈不得使用在不锈钢螺钉联接。

8.4.2. 可以进行哪些维修？

- 更换叶轮
- 更换水力部件

当心锐利边缘！
叶轮和水力部件开口上可能形成锐利边缘。存在人员伤害的风险！穿戴必要的防护服，例如，安全手套。

更换水力部件和叶轮

图 7： 部件概览

1	固定水力部件的螺母	3	叶轮
2	水力部件	4	紧固叶轮的螺钉，包括垫圈和“Nord Lock”锁紧垫圈

1. 将泵设备竖直放置在结实的表面上。
   确保泵不会倒落和/或滑走！
2. 旋开螺母（1），将水力部件从密封壳体上拆下。
3. 使用适当的设备来紧固水力部件（2），然后向上拔出电机及叶轮。可能需要使用拥有足够承载能力的提升装置！
4. 将电机水平放置在稳定表面上，防止其滑动。
5. 使用适当的设备安装叶轮（3），拆下紧固螺钉（4）、垫圈和“Nord Lock”锁紧垫圈。
   注意螺钉锁紧！
6. 使用合适的拉拔器从轴上拆下叶轮（3）。
7. 清洁轴。
8. 将新叶轮安装到轴上。
   确保滑动面不受损。
9. 应用新的紧固螺钉（4）及“Nord Lock”锁紧垫圈和垫圈，然后重新装配。安装叶轮并拧紧紧固螺钉。
   注意规定的拧紧扭矩！
10. 提起带叶轮的电机，将其摆动到水力部件上。可能需要使用拥有足够承载能力的提升装置！
11. 慢慢将电机下放至水力部件上并使用螺母（1）再次紧固泵壳。
12. 测试：必须可以手动转动叶轮。

9. 故障查找和可能的解决方法

为防止在修理泵故障时发生设备损坏或人员严重受伤，必须遵守如下几点：

- 仅当专业人员在场时才尝试修理故障。也就是说，各项作业必须由经过培训的专业人员进行。例如，电气作业必须由专业电工负责。
- 断开电源并将泵锁定，避免泵意外重启。采取适当的安全预防措施。
- 始终安排第二个人在场，确保紧急状况下关闭泵设备。
- 固定旋转部件，避免受伤。
- 如果对泵进行未经批准的改动，运营商应自行承担风险，制造商不承担任何担保义务。

故障：装置不启动

1. 电力供应中断，电缆或电机绕组内短路或接地故障。
   - 如有必要，由专业人员检查并更换电机和电线
2. 保险丝、电机保护开关和/或监控装置跳闸
   - 必要时，请专业人员检查连接并进行纠正。
   - 根据技术规范安装或调整电机保护开关和保险丝，重置监控设备。
   - 检查叶轮是否运转平稳。必要时，清洁或松开叶轮。
3. 电极（选配）将电源电路中断（操作人员相关）。
   - 参见故障：机械密封泄漏，密封室监控报告故障，或关闭泵设备。

故障：装置启动，但电机保护开关在试运行不久后触发

1. 电机保护开关上的热敏触发装置设置不当
   - 请专业人员将触发装置的设置与技术规范比对，并进行必要的纠正
2. 由于大压降而增加功耗
   - 请电工检查各相位上的电压，必要时重新布线
3. 两相运行
   - 必要时，请专业人员检查连接并进行纠正
4. 三个相位上的电压差过高
   - 必要时，请专业人员检查连接和开关系统并进行纠正
5. 旋转方向不正确
   - 调换供电电源线的两个相位
6. 粘结材料、堵塞和/或固体物质阻碍叶轮，电流消耗增加
   - 关闭泵并锁定，避免再次通电，松开叶轮或清洁进水口
7. 液体太粘稠
   - 联系制造商

故障：装置运行，但不出水

1. 没有液体
   - 打开容器入口或闸阀
2. 入口堵塞
   - 清洁供应管线、闸阀、进水管件、进水口或吸滤器
3. 叶轮堵塞或阻塞
   - 关闭泵并锁定，避免再次通电，然后松开叶轮
4. 软管或管路存在缺陷
   - 更换存在缺陷的部件
5. 断续周期工作方式
   - 检查开关系统

故障：装置运行，但不在规定的运行参数范围内

1. 入口堵塞
   - 清洁供应管线、闸阀、进水管件、进水口或吸滤器
2. 出口压力管中的闸阀关闭
   - 完全开启闸阀
3. 叶轮堵塞或阻塞
   - 关闭泵并锁定，避免再次通电，然后松开叶轮
4. 旋转方向不正确
   - 调换供电电源线的 2 个相位
5. 系统内有空气
   - 检查管路、压力护罩和/或水力部件，必要时进行排空
6. 泵在泵送时受到过大压力
   - 检查出口压力管的闸阀。如有必要，完全开启，使用不同的叶轮，或联系制造商
7. 磨损迹象
   - 更换存在缺陷的部件
8. 软管或管路存在缺陷
   - 更换存在缺陷的部件
9. 液体内含气量超标
   - 联系制造商
10. 两相运行
    - 必要时，请专业人员检查连接并进行纠正
11. 运行时潜水面过度下降
    - 检查系统的供应和能力，检查液位控制设置和功能

故障：装置运行不平稳，有噪音

1. 泵在不允许的范围内运行
   - 检查泵的运行数据，如有必要，进行纠正，或调整运行条件
2. 进水口、滤网和/或叶轮堵塞
   - 清洁进水口、滤网和/或叶轮
3. 叶轮阻塞
   - 关闭泵并锁定，避免再次通电，然后松开叶轮
4. 液体内含气量超标
   - 联系制造商
5. 两相运行
   - 必要时，请专业人员检查连接并进行纠正
6. 旋转方向不正确
   - 调换供电电源线的 2 个相位
7. 磨损迹象
   - 更换存在缺陷的部件
8. 电机轴承存在缺陷
   - 联系制造商
9. 泵在机械应力下安装
   - 检查安装，如有必要，使用伸缩接头

故障：机械密封泄漏，密封室监控报告故障，或关闭装置。

1. 由于长时间存放和/或温度波动造成冷凝物聚积
   - 在没有电极情况下短时运行泵（最多 5 分钟）
2. 在使用新机械密封运行时，泄漏增加
   - 换油
3. 电极导线存在缺陷
   - 更换电极
4. 机械密封存在缺陷
   - 更换机械密封并联系制造商！

进一步的故障排除措施

若上述各项措施未能纠正故障，则请联系 Wilo 客户服务中心.可以向您提供如下帮助：

- Wilo 客户服务中心的电话和书面支持
- Wilo 客户服务中心的现场支持
- 在工厂对泵进行检查或修理

请注意，我们客户支持部门所提供的某些服务可能需要收费。更多详情，请联系 Wilo 客户服务中心。

10. 附录

10.1. 拧紧扭矩

不锈钢螺钉（A2/A4）		
螺纹	拧紧扭矩	
	Nm	kp m
M5	5.5	0.56
M6	7.5	0.76
M8	18.5	1.89
M10	37	3.77
M12	57	5.81

不锈钢螺钉（A2/A4）		
螺纹	拧紧扭矩	
	Nm	kp m
M16	135	13.76
M20	230	23.45
M24	285	29.05
M27	415	42.30
M30	565	57.59

带“Nord Lock”锁紧垫圈的 Geomet 涂层螺钉（强度 10.9）		
螺纹	拧紧扭矩	
	Nm	kp m
M5	9.2	0.94
M6	15	1.53
M8	36.8	3.75
M10	73.6	7.50
M12	126.5	12.90
M16	155	15.84
M20	265	27.08

10.2. 备件

必须从当地专业经销商和/或 Wilo 客户服务部门处订购备件。为了避免查询和订购错误，每次订购时应提交铭牌上的所有数据。

如有更改，恕不另行通知！

1. Introduction

1.1. About this document

The language of the original operating instructions is English. All other languages of these instructions are translations of the original operating instructions.

This manual is divided into individual sections, which are listed in the table of contents. Each section has a heading which clearly describes its content.

1.2. Personnel qualifications

All personnel who work on or with the pump must be qualified for such work; electrical work, for example, may only be carried out by a qualified electrician. All personnel must be of legal age.

Operating and maintenance personnel must also observe national accident prevention regulations.

It must be ensured that personnel have read and understood the instructions in this operating and maintenance handbook; if necessary, this manual must be ordered from the manufacturer in the required language.

This pump is not intended for use by persons (including children) with limited physical, sensory or mental capacities or without the relevant experience or knowledge, unless they are supervised by a person responsible for their safety and receive instructions from this person on how to use the pump.

Children must be supervised in order to ensure that they do not play with the pump.

1.3. Copyright

This installation and operating instruction has been copyrighted by the manufacturer. The installation and operating instruction is intended for use by installation, operating and maintenance personnel. It contains regulations and drawings which may not be reproduced or distributed, either completely or in part, or used for any competitive purpose without the expressed consent of the manufacturer. The illustrations used may differ from the original and are only intended as an exemplary representation of the pumps.

1.4. Subject to changes proviso

The manufacturer reserves the right to make technical modifications to units or components. This installation and operating instructions refers to the pump shown on the title page.

1.5. Warranty

In general, the specifications in the current “general terms and conditions” apply for the warranty. You can find these here:
www.wilo.com/legal

Any deviations must be contractually agreed and shall then be given priority.

1.5.1. General

The manufacturer is obliged to correct any defects found in the pumps it sells, provided that the defects meet one or more of the following requirements:

- The defects are caused by the materials used or the way the product was manufactured or designed.
- The defects were reported in writing to the manufacturer within the agreed warranty period.
- The pump was used only as prescribed.
- All safety and control devices were connected and inspected by qualified personnel.

1.5.2. Warranty period

The duration of the warranty period is stipulated in the “general terms and conditions”.

Any deviations must be contractually agreed.

1.5.3. Spare parts, attachments and modifications

Only genuine spare parts from the manufacturer may be used for repairs, replacements, attachments and modifications. Unauthorised add-ons and modifications or the use of non-original spare parts can seriously damage the pump and/or injure personnel.

1.5.4. Maintenance

The prescribed maintenance and inspection work should be carried out regularly. This work may only be carried out by qualified, trained and authorised personnel.

1.5.5. Damage to the product

Damage and malfunctions that endanger safety must be eliminated immediately by trained personnel. The pump may only be operated if it is in perfect working order.

In general, repairs should only be carried out by Wilo customer service.

1.5.6. Disclaimer

No warranty claims will be accepted or liability will be assumed for pump damage if any of the following items apply:

- The manufacturer deems that information provided by the operator or customer is insufficient or incorrect
- Non-compliance with safety instructions and working instructions as specified in this installation and operating instructions
- Improper use
- Incorrect storage and transport
- Improper assembly/dismantling
- Insufficient maintenance
- Incorrect repairs
- Inadequate construction site or construction work
- Chemical, electrochemical and electrical influences
- Wear

This means the manufacturer’s liability excludes all liability for personal injury, material damage or financial losses.

2. Safety

This section lists all generally applicable safety instructions and technical information. In addition, any other sections contain specific safety instructions and technical information. All instructions and information must be observed and followed during the various phases of the pump's life cycle (installation, operation, maintenance, transport etc.)! The operator is responsible to ensure that the personnel follow these instructions and guidelines.

2.1. Instructions and safety instructions

This manual uses instructions and safety instructions for preventing injury and damage to property. For a clear identification for the personnel, the instructions and safety instructions are distinguished as follows:

- Instructions appear in bold and refer directly to the preceding text or section.
- Safety instructions are slightly indented and bold and always start with a signal word.
  - **Danger**
    Serious or fatal injuries can occur!
  - **Warning**
    Serious injuries can occur!
  - **Caution**
    Injuries can occur!
  - **Caution** (instruction without symbol)
    Substantial property damage can occur. Irreparable damage is possible!
- Safety instructions which refer to personal injury appear in black and are always accompanied by a safety symbol. Danger, prohibition or instruction symbols are used as safety symbols.

  Example:

Danger symbol: General hazard

Danger symbol, for example, electrical current

Prohibition symbol, for example, keep out!

Instruction symbol, for example, wear protective clothing

The applied safety symbols conform to the generally applicable directives and regulations (ANSI).

- Safety instructions which only refer to material damage are printed in grey, without safety symbols.

2.2. General safety

- When installing or removing the pump, never work alone in rooms and chambers. A second person must always be present.
- The pump must always be switched off before any work is performed on it (assembly, dismantling, maintenance, installation). The pump must be disconnected from the electrical system and secured against being switched on again. All rotating components must have come to a stop.
- The operator should inform his/her superior immediately should any defects or irregularities occur.
- The operator must shut down the equipment immediately if defects occur that represent a safety risk. These include:
  - Failure of the safety and/or monitoring devices
  - Damage to important components
  - Damage to electrical equipment, cables, and insulation.
- Tools and other objects should be kept in the designated places to ensure that they can be used at any time.
- Sufficient ventilation must be provided in enclosed rooms.
- When welding or working with electronic devices, make sure there is no risk of explosion.
- Only use lifting gear which is legally defined as such and officially approved.
- The lifting gear must be kept safely and must be suitable for the conditions of use (weather, hooking unit, load, etc.).
- Mobile equipment for lifting loads should be used in such a way that it is guaranteed to remain stable during operation.
- When using mobile equipment for lifting non-guided loads, take action to prevent tipping, shifting, sliding, etc.
- Measures should be taken to ensure that no person is ever directly beneath a suspended load. Furthermore, it is also prohibited to move suspended loads over workplaces where people are present.
- If mobile equipment is used for lifting loads, a second person should be present to coordinate the procedure if required (for example, if the operator's field of vision is blocked).
- The load to be lifted must be transported so that no-one will be injured if there is a power failure. Furthermore, if such work is carried out outdoors, it must be cancelled if weather conditions worsen.

  These instructions must be strictly observed. Non-observance can result in injury or substantial material damage.

2.3. Electrical work

ELECTRICAL hazard!
Incorrectly performed electrical work can result in fatal injury! This work may only be carried out by a qualified electrician.

BEWARE of moisture!
Moisture penetrating the cable will damage both the pump and the cable. Never immerse the cable end in fluid and always protect it from moisture. Unused wires must be insulated!

The pumps are operated with three-phase current. The governing national directives, standards and regulations as well as the requirements of the local energy supply company must be observed.

The person operating the pump must know where it is supplied with power and how to cut off the supply. A motor protection switch must be installed by the customer for three-phase AC motors. It is advisable to install a residual-current device (RCD). If there is a possibility that people can come into contact with the pump and the fluid (for example on construction sites), the connection **must** be equipped with an additional residual-current device (RCD).

The section entitled "Electrical connection" must be observed when connecting the product. The technical specifications must be observed strictly. Our pumps must always be grounded.

If the pump has been switched off by a protective device, it must not be switched on again until the error has been corrected.

When the pump is connected to the electrical control panel, particularly when electronic devices such as soft start-up control or frequency converters are used, the switchgear manufacturer's specifications must be followed to comply with the electromagnetic compatibility requirements. Special separate shielding measures (e.g. shielded cables, filters, etc.) may be necessary for the power supply and control cables.

Connections may only be made if the switchgear meets the local standards. Mobile radio equipment may cause malfunctions in the system.

BEWARE of electromagnetic radiation!
Electromagnetic radiation can pose a fatal risk for people with cardiac stimulator's. Put up appropriate signs and make sure anyone affected is aware of the danger!

2.4. Safety and monitoring devices

The pump is equipped with the following monitoring equipment:

- Motor compartment monitoring
- Thermal motor monitor as a temperature limiter (single-circuit temperature monitor)
- Monitoring the sealing chamber
- Thermal motor bearing monitoring
- Terminal compartment monitoring

These devices must be connected by an electrician and checked to ensure that they function correctly before commissioning.

The personnel must be informed about the installed systems and how they work.

CAUTION!
Never operate the pump if the monitoring devices have been removed or damaged, or if they do not work.

2.5. Safety rules during operation

When operating the pump, always follow the locally applicable laws and regulations for work safety, accident prevention and handling electrical units. In order to ensure safe working practice, the responsibilities of employees should be clearly specified by the operator. All personnel are responsible for ensuring that regulations are observed.

Due to their design, centrifugal pumps have rotating components that are easily accessible. Depending on the operating conditions, sharp edges can occur on these components.

WARNING: Danger of crushing and amputation of limbs!
Sharp edges can form on the rotating components in the hydraulics. These can result in crushing and amputation of limbs.

- **Never reach into the hydraulics when the unit is in operation.**
- **Before performing maintenance or repairs, switch off the pump, disconnect it from the mains and secure it against being switched on again without authorisation.**
- **Always allow the rotating components to come to a standstill!**

2.6. Fluids

Each fluid differs in respect of composition, corrosiveness, abrasiveness, dry matter content and in many other aspects. Generally, our pumps can be used for many applications. Please note that if requirements change (density, viscosity or general composition), this can also affect many parameters of the pump.

When using or replacing the pump in a different fluid, observe the following points:

- The fluid can be contaminated by oil from the sealing chamber if the mechanical seal is defective.

  Use in drinking water is not permitted!

- Pumps that have been operated in dirty wastewater must be cleaned thoroughly before being used for other fluids.
- Pumps that have been operated in sewage containing faeces and/or fluids that are hazardous to health must be decontaminated before being used with other fluids.

  It must be clarified whether the pump can be used at all with another fluid.

2.7. Sound pressure

Depending on size and capacity (kW) of the pump, the sound pressure during operation is between approximately 70 dB (A) and 110 dB (A).
The actual sound pressure, however, depends on several factors. These include the installation depth, configuration, fastening of accessories and pipeline, duty point, immersion depth, etc.
We recommend that the operator makes an additional measurement at the workplace once the pump is running at its duty point and under all working conditions.

CAUTION: Wear ear protectors!
In terms of the applicable laws and regulations, ear protection must be worn if the sound pressure is greater than 85 dB (A).
The operator is responsible for ensuring compliance with these regulations.

2.8. Directives used

This pump is subject to local and harmonised standards.

3. Product description

The pump is manufactured with great care and is subject to constant quality controls. Trouble-free operation is guaranteed if it is installed and maintained correctly.

3.1. Intended use and fields of application

DANGER – explosive fluids!
It is strictly prohibited to pump explosive fluids (gasoline, kerosene, etc.). The pumps are not designed for these fluids!

The Wilo-Sefa SA... submersible motor pumps are suitable for intermittent periodic duty and continuous duty, pumping the following fluids:

- Wastewater (without faeces)
- Sewage (containing faeces)
- Municipal and industrial wastewater
- Sludge up to a maximum of 8 % dry solids (depending on the type)
  from chambers and basins.

The submersible motor pumps must not be used for pumping:

- Drinking water
- Fluids with hard components such as stone, wood, metal and sand
- Explosive or highly flammable fluids in pure form.
  Intended use also includes observation of this manual. Any other use is regarded as non-compliant with the intended use.

3.2. Construction

The Wilo-Sefa SA with SI motor can be operated vertically in a stationary wet well installation.

Fig. 1.: Description of units

1	Handle	4	Hydraulic housing
2	Motor housing	5	Pressure connection
3	Seal housing with sealing chamber	6	Fastening point for chains with shackle

3.2.1. Hydraulics

Rotodynamic hydraulics with channel impeller and connection on the pressure side as a horizontal flange connection.
This is a non self-priming pump, in other words, the fluid must flow in either automatically or with supply pressure.

3.2.2. Motor

Dry motors are used. The motor is cooled by the fluid surrounding it. The waste heat is transferred directly to the fluid via the motor housing. The motor must operate in immersed conditions.

NOTE
An operation of the motor in non-immersed operating mode is **not** possible!

The connection cable has bare (free) cable ends. The standard length is 12 m or can be customer-specific.

3.2.3. Monitoring equipment

- **Motor/terminal compartment monitoring**
  The motor has an internal electrode to monitor the motor/terminal compartment. This signals if there is water ingress into the motor compartment or terminal board, respectively.
- **Thermal motor monitor**
  The thermal motor monitor protects the motor winding from overheating. Pt100 sensors are used for this as standard.
- **Monitoring the sealing chamber**
  The motor has an internal pencil electrode to monitor the sealing chamber. This signals if there is water ingress into the sealing chamber through the mechanical seal on the fluid side.
- **Thermal motor bearing monitoring**
  The thermal motor bearing monitoring protects the motor bearings from overheating. Pt100 sensors are used as sensors.

3.2.4. Sealing

The seal for the fluid and the motor compartment is made via two separate mechanical seals on the motor and on the fluid side. The sealing chamber between the mechanical seals is filled with ecologically safe medicinal white oil.

3.2.5. Materials

- Motor housing: grey cast iron
- Hydraulic housing: grey cast iron
- Impeller: grey cast iron
- Shaft: 2Cr13
- Static seals: NBR

- Mechanical sealing: SiC/SiC

3.3. Operation in an explosive atmosphere

An operation in an explosive atmosphere is **not** allowed!

3.4. Operating modes

3.4.1. Operating mode "S1" (continuous duty)

The pump can operate continuously at the rated load without exceeding the maximum permissible temperature.

3.5. Technical data

General data	
Mains connection [U/f]:	See rating plate
Power consumption [P_1]:	See rating plate
Rated power [P_2]:	See rating plate
Maximum delivery head [H]:	See rating plate
Maximum volume flow [Q]:	See rating plate
Activation type [AT]:	See rating plate
Fluid temperature [t]:	3...40 °C
Protection class:	IP 68
Insulation class [Cl.]:	F
Speed [n]:	See rating plate
Max. immersion depth:	20 m
Explosion protection:	–
Operating modes	
Immersed [OT_S]:	S1
Non-immersed [OT_E]:	–
Switching frequency	
Maximum:	6/h with a break of 10 min
Connections	
Pressure side:	SA 25...: DN 250/PN 10 SA 35...: DN 350/PN 10
Free ball passage:	SA 25...: 80 mm SA 35...: 150 mm

3.6. Type key

Example:	Wilo-Sefa SA 25.93M-380A/SI36-6
SA	Series
25	Nominal diameter of pressure connection, e.g. DN 250
93	Hydraulic code
M	Type of impeller: V = Vortex impeller C = Channel impeller M = Multi-channel impeller T = SOLID impeller, closed G = SOLID impeller, semi-open
380	No. of curve characteristic
A	Standard material version
SI	Submersible motor for immersed operation
36	Nominal diameter of the electrical packaging in cm
6	No. of poles

3.7. Scope of delivery

- Pump with 12 m cable (standard version; customer-specific length is possible) and free cable end
- Installation and operation instructions

3.8. Accessories

- Suspension unit
- Level controllers
- Fixing accessories and chains
- Switching devices, relays and plugs

The accessories are optionally and on request!

4. Transport and storage

4.1. Delivery

Upon delivery, check immediately that the shipment is complete and undamaged. If any components are damaged or missing, the transport company or the manufacturer must be notified on the day of delivery. Claims made after this date cannot be recognised. Damage to components must be noted on the freight documentation.

4.2. Transport

Only the appropriate and approved fastening devices, transportation and lifting equipment may be used. These must have sufficient load-bearing capacity to ensure that the pump can be transported safely. If chains are used, they must be secured against slipping.

The personnel must be qualified for the tasks and must follow all applicable national safety regulations during the work.

The pump is delivered by the manufacturer or shipping agency in suitable packaging. This normally precludes the possibility of damage occurring during transport and storage. The packaging should be stored in a safe place for reuse if the product is frequently used at different locations.

4.3. Storage

Newly supplied pumps are prepared so that they can be stored for at least one year. The pump should be cleaned thoroughly before it is put into temporary storage.

The following should be considered for storage:

- Place the pump on a firm surface and secure it against slipping and falling over. Wastewater submersible pumps are stored vertically.

DANGER from falling over!
Never set down the pump unsecured. If the pump falls over, injury can occur!

- The pumps can be stored at temperatures down to -15 °C. The store room must be dry. We recom-

mend a frost-proof room for storage with a temperature between 5 °C and 25 °C.
- Any suction or pressure connections should be closed tightly before storage to prevent contaminants.
- The current supply cables should be protected against kinking, damage, and moisture.

ELECTRICAL hazard!
Damaged power supply cables can cause fatal injury! Defective cables must be replaced by a qualified electrician immediately.

BEWARE of moisture!
Moisture penetrating the cable will damage both the pump and the cable. Never immerse the cable end in fluid and always protect it from moisture.

- The pump must be protected from direct sunlight, heat, dust and frost.
- The impellers must be turned at regular intervals. This prevents the bearings from jamming and renews the film of lubricant on the mechanical seal.

BEWARE of sharp edges!
Sharp edges can form on impellers and hydraulic ports. There is a risk of injuries! Wear the necessary protective clothing, e.g. safety gloves.

- If the pump has been stored for a long period it should be cleaned of impurities such as dust and oil deposits prior to commissioning. Impellers should be checked for smooth operation. The housing coatings should be checked for damage.

  Prior to commissioning, the fill level in the sealing chamber should be checked and topped up, if necessary!

  Damaged coatings should be repaired immediately. Only a coating that is completely intact fulfils the criteria for intended use!

  Please note that elastomer components and coatings become brittle over the time. If the product is to be stored for longer than six months, we recommend checking these components and replacing them as necessary. Consult the manufacturer for details.

4.4. Return delivery

Pumps which are returned to the factory must be properly packaged. This means that impurities have been removed from the pump and that it has been decontaminated if used with fluids which are hazardous to health.

For shipping, the components must be packed in tear-proof plastic bags of sufficient size so that they are tightly sealed and leak-proof. Furthermore, the packaging must protect the pump from damage during transportation. If you have any questions, please contact the manufacturer!

5. Installation

In order to prevent damage to the product or serious injury during installation, the following points must be observed:
- Installation work – assembly and installation of the pump – may only be carried out by qualified persons. The safety instructions must be followed at all times.
- The pump must be inspected for transport damage before any installation work is carried out.

5.1. General

For dimensioning and operation of technical sewage systems, observe the pertinent local regulations and directives for sewage technology.

Note that pressure surges can occur, in particular with stationary installations where water is pumped with longer discharge pipes (especially with steady ascents or steep terrain).

Pressure surges can result in destruction of the pump or system and noise pollution due to flap knock. Pressure surges can be prevented by applying suitable measures (e.g. non-return valves with an adjustable closing time or special routing of the discharge pipeline).

If you are using level control, make sure that the minimum water coverage is present. Air pockets in the hydraulic housing or piping system must be avoided at all costs and must be removed using a suitable ventilation system and/or placing the pump at a slight angle (if installed as a portable pump). Protect the pump from frost.

5.2. Installation methods

- Vertical stationary wet well installation with suspension unit

5.3. Installation

DANGER of falling!
When installing the pump and its accessories, work is sometimes performed directly at the edge of the basin or chamber. Carelessness or wearing inappropriate clothing could result in a fall. There is a risk of fatal injury! Take all necessary safety precautions to prevent this.

The following information should be considered when installing the pump:
- This work must be carried out by a qualified person and electrical work must be carried out by an electrician.
- The collector tank must be clean, free of coarse solids, dry, frost-free and, if necessary, decontaminated. It must also be suitable for the particular pump.
- When working in chambers, a second person must be present for safety reasons. If there is a risk of poisonous or asphyxiating gases forming, the necessary precautions must be taken.
- Depending on the ambient conditions in operation, the unit planner must select the chamber size and motor cooling time accordingly.

- Ensure that lifting equipment can be fitted without any trouble, since this is required for assembly and removal of the pump. It must be possible to reach the pump safely in its operating and storage locations using the lifting equipment. The unit must be positioned on a firm bearing surface. For transporting the pump, the load-carrying equipment must be secured to the lifting eyelets provided. When using chains, they must be connected with a shackle to the lifting eyelets or the carrying handle. Lifting gear must be technically approved.
- Power supply cables must be laid out in such a way that safe operation and trouble-free assembly/dismantling are possible at all times. The pump must never be carried or dragged by the power supply cable. Check whether the cable present is long enough for its cross-section and its installation type.
- When using switchgear, the corresponding protection class must be observed. In general, switchgear is to be installed outside potentially explosive areas in such a way that it is protected from flooding.
- Structural components and foundations must be of sufficient stability in order to allow the product to be fixed securely and functionally. The operator or the supplier is responsible for the provision of the foundations and their suitability in terms of dimensions, stability and strength.
- Never let the pump run dry. The water level must never fall below the minimum. Therefore, we recommend installing a level control system or a dry-running protection system where there are great variations in the level.
- Use guide and deflector plates for the fluid inlet. If the water jet reaches the surface of the water, air is introduced into the fluid, which can accumulate in the pipe system. This can result in inadmissible operating conditions and deactivation of the entire system.
- Check that the available consulting documentation (installation plans, layout of the collector tank, inlet ratios) is complete and correct.
- Please observe all regulations, rules and legal requirements for working with and underneath heavy suspended loads. Wear appropriate protective clothing/equipment.
- Please also observe the applicable national accident prevention regulations and trade association safety provisions.

5.3.1. Maintenance work

After a storage period of more than six months, the following maintenance work must be carried out before installation:

- Rotate impeller
- Check oil level in the sealing chamber

Rotate impeller

1. Position the pump horizontally on a firm surface.
   Make sure that the pump cannot fall over and/ or slip.
2. Carefully and slowly reach into the hydraulics housing from below and rotate the impeller.

BEWARE of sharp edges!
Sharp edges can form on the impellers and hydraulic opening. There is a risk of injury!
Wear the necessary protective clothing, such as protective gloves.

Check oil level in sealing chamber

The sealing chamber has a hole for draining and filling the chamber.

1. Position the pump horizontally on a firm surface with the screw plug facing upwards.
   Make sure that the pump cannot fall over and/ or slip.
2. Unscrew the screw plug.
3. The oil should reach up to about 1 cm below the hole for the screw plug.
4. If there is not enough oil in the sealing chamber, top it up. To do so, follow the instructions under “Oil change” in the “Maintenance and repair” section.
5. Clean the screw plug, replace the joint ring, if necessary, and screw it back in.

5.3.2. Stationary wet well installation

A suspension unit must be installed for wet well installation. This must be ordered separately. The pipe system on the pressure side is connected to this.

The connected pipe system must be self-supporting, i.e. it may not be supported by the suspension unit.

The operating area must be laid out in a way that the suspension unit can be installed and operated without difficulty.

An operation with a non-immersed motor is not allowed!

Fig. 2.: Stationary wet well installation

1	Suspension unit	6	Chain*
2	Non-return valve	7	Min. water level
3	Gate valve	8	Deflector plate
4	Pipe elbow	9	Inlet
5	Guide pipe*		
A	Minimum distances in parallel operation		
B	Minimum distances in alternating operation		

* To be provided by the customer!

Work steps

1. Installation of the suspension unit: about 1-2 h (please see the operating manual for the suspension unit).
2. Preparing the pump for operation on a suspension unit: about <1 h (please see the operating manual for the suspension unit).
3. Installing the pump: about 1-2 h

- Check that the suspension unit is firmly fixed and functions properly.
- Secure the lifting equipment to the pump with the shackle, lift the pump and then lower slowly on to the guide pipes in the operating area.
- Hold the electric power cables slightly taut when lowering.
- When the pump is connected to the suspension unit, make sure that the electric power cables are secured adequately to prevent them falling and becoming damaged.
- Have the electrical connections carried out by a qualified electrician.
- The pressure connection is sealed by its own weight.

4. Installing optional accessories, such as dry-running protection or level controllers.
5. Starting up the pump: about 1 h
   - As described in the "Commissioning" section
   - For new installation: Flood the operating area
   - Vent the pressure pipe.

5.3.3. Level control

Fill levels can be determined using the level control system, meaning the pump is switched on and off automatically. The fill level can be recorded using float switches, pressure and ultrasound measurements or level sensors.

Note the following information:

- When using float switches, ensure that they can move freely in the operating area!
- The water level must not fall below the minimum!
- The maximum starts per hour may not be exceeded!
- If the fill levels fluctuate strongly, then a level control should be made on two test points as standard. This means larger differential gaps are reached.

Installation

For correct installation, please see the installation and operating instructions for the level control device.

Observe the information on the maximum starts per hour and the minimum water level!

5.4. Dry-running protection

Make sure that no air enters the hydraulic housing. The pump must therefore always be immersed in the fluid up to the top edge of the hydraulic housing. For optimum reliability, we recommend installing a dry-running protection system.

Correct running is ensured by float switches or level sensors. The float switch or sensor is fixed in the chamber and switches off the pump when the water level falls below the minimum coverage level. If dry-running protection is only put into effect with one float when fill levels deviate significantly, then the pump may turn on and off constantly! This can result in the maximum number of motor activations (switching cycles) being exceeded.

5.4.1. Corrective measures for avoiding excessive switching cycles

- Manual reset
  The motor is switched off when the water level falls below the minimum coverage level and switched back on when a sufficient water level is reached.
- Separate reactivation points
  A second switching point (additional float or electrode) is used to obtain a sufficient difference between the activation and deactivation points. This prevents constant switching. This function can be put into effect with a level control relay.

5.5. Electrical connection

ELECTROCUTION hazard!
Incorrect electrical connections can cause fatal electric shocks. Electrical connections may only be carried out by a qualified electrician who is approved by the local power supplier in accordance with locally applicable regulations.

- The mains connection current and voltage must be as stated on the rating plate.
- Connect the power supply cable in accordance with the applicable standards and regulations and according to the conductor assignment.
- Any available monitoring equipment, e.g. for thermal motor monitoring, must be connected and tested to ensure that it works properly.
- For three-phase AC motors, a clockwise rotating field must be available.
- Ground the pump properly.
  Pumps that are permanently installed must be grounded in compliance with local standards. If a separate grounding conductor is available, it must be connected to the marked hole or grounding terminal (⏚) using a suitable screw, nut, toothed washer and flat washer. The cross-section of the cable for the grounding conductor connection must correspond to the local regulations.
- **A motor protection switch must be used for motors with a free cable end.** We recommend using a residual-current device (RCD).
- Switching devices must be purchased as accessories.

5.5.1. Check the motor winding and the monitoring devices before initial commissioning or after lengthy storage

If the values measured deviate from the specifications, moisture may have penetrated into the motor or the power supply cable or the monitoring unit may be defective. Do not connect the pump and consult Wilo customer service.

Insulation resistance of the motor winding

Before connecting the power supply cable, the insulation resistance must be tested. This can be measured with an insulation tester (measuring voltage = 500 V).

- On initial commissioning: insulation resistance may not be less than 50 MΩ.
- For further measurements: value must be larger than 2 MΩ.

Temperature sensor and electrodes
Before connecting the monitoring devices, these must be checked with an insulation tester (measuring voltage = 2.5 VDC). The following values must be complied with:

- Pt100 sensor: Pt100 sensors have a value of 100 Ω at 0 °C. Between 0 °C and 100 °C, this value increases by 0.385 Ω every 1 °C. At an ambient temperature of 20 °C, they reach a value of 107.7 Ω.
- Electrode: This value must approach 2 MΩ. If the value is lower than 33 kΩ, there is water in the oil or motor/terminal compartment. Also observe the instructions of the optional evaluation relay.

5.5.2. Mains fuses

The back-up fuse must be rated according to the starting current. You will find the starting current on the rating plate.
Only slow-blow fuses or K characteristic automatic cut-outs may be used as a back-up fuse.

5.5.3. Three-phase AC motor

The three-phase current version is supplied with free cable ends. It is connected to the mains at the switch box terminals.
Electrical connections may only be made by a qualified electrician!

Fig. 3.: Wiring diagram for motor in direct activation

One motor cable	
U	Yellow (YE)
V	Green (GN)
W	Red (RD)
G	Green-yellow (GN-YE)

Fig. 4.: Wiring diagram for motor in star-delta activation

Two separate motor cables		
U1	Yellow (YE)	First power cable
V1	Green (GN)	
W1	Red (RD)	
G	Green-yellow (GN-YE)	
U2	Yellow (YE)	Second power cable
V2	Green (GN)	
W2	Red (RD)	
G	Green-yellow (GN-YE)	

5.5.4. Monitoring device connections

All monitoring devices must be connected at all times!

Fig. 5.: Wiring diagram for monitoring devices

Control cable, 12 wires	
1	Terminal compartment monitoring
8	
5	Motor compartment monitoring
8	
6	Monitoring sealing chamber
8	
7	Temperature monitor for motor bearings
9	
2	Motor temperature monitor, first phase
10	
3	Motor temperature monitor, second phase
11	
4	Motor temperature monitor, third phase
12	

Motor/terminal compartment monitoring
The motor/terminal compartment monitoring (moisture sensor) must be connected via an evaluation relay. The threshold is 33 kΩ.
When the threshold is reached, the unit must deactivate.

Motor temperature monitor
Thermal monitoring of the motor is performed by Pt100 sensors. These must be connected via an evaluation relay. The threshold is 135 °C (152 Ω). When the threshold is reached, the unit must switch off.
For this reason, no warranty claims can be accepted for any damage to the winding resulting from unsuitable motor monitoring.

Monitoring the sealing chamber
The sealing chamber is monitored by an internal pencil electrode. This must be connected via an evaluation relay.
The recommended threshold is 33 kΩ. When the threshold is reached, a warning must be given or the unit switched off.

CAUTION!
If there is only a warning, the pump could be irreparably damaged by water ingress. We always recommend deactivation!

Temperature monitor for motor bearings
Thermal monitoring of the motor bearings is performed by Pt100 sensors. These must be connected via an evaluation relay. The threshold is 95 °C (136 Ω). When the threshold is reached, the unit must switch off.

5.6. Motor protection and activation types

5.6.1. Motor protection

The minimum requirement for motors with a free cable end is a thermal relay/motor protection switch with temperature compensation, differential triggering and an anti-reactivation device.

If the pump is connected to electrical systems in which faults frequently occur, we recommend installing additional protective devices at the customer (overvoltage, undervoltage or phase failure relays, lightning protection etc.). We also recommend installing a residual-current device (RCD).

Local and national regulations must be observed when connecting the pump.

5.6.2. Activation types

Direct activation

At full load, the motor protection should be set to the rated current shown on the rating plate.

At partial load, we recommend setting the motor protection 5 % above the current measured at the duty point.

The rated current may not be exceeded!

Star-delta activation

The motor protection setting depends on the installation:

- Motor protection installed in the motor line: Set the motor protection to 0.58 x the rated current.
- Motor protection installed in the mains supply cable: Set the motor protection to the rated current.

The maximum start-up time in star connection is 3 seconds.

Soft start activation

- At full load, the motor protection should be set to the rated current at the duty point. At partial load, we recommend that the motor protection be set 5 % above the current measured at the duty point.
- The current consumption must be less than the rated current during the entire operation period.
- Because of the upstream motor protection, the motor should be started and stopped within 30 seconds.
- To avoid power losses during operation, bypass the electronic starter (soft start) after normal operation has been established.

5.6.3. Operation with frequency converters

Operation on the frequency converter is **not** allowed!

6. Commissioning

The “Commissioning” section contains any important instructions for the operating personnel for starting up and operating the pump.

The following conditions must be adhered to and monitored:

- Type of installation
- Operating mode
- Minimum water submersion / max. immersion depth

If the pump has not been operated for an extended period, also check these conditions and rectify any defects identified!

Always keep this manual either by the pump or in a place specially reserved for it, where it is accessible for the entire operating personnel at any time.

In order to prevent damage or serious injury when commissioning the pump, the following points must be observed:

- The pump may only be commissioned by qualified personnel. The safety instructions must be observed at all times.
- Any person working on or with the pump must have received, read and understood this installation and operating instruction.
- All safety devices and emergency cut-outs must be connected and checked to ensure that they work properly.
- Electrical and mechanical adjustments must be made by specialist personnel.
- The pump is suitable for use under the specified operating conditions.
- The work area of the pump is not a recreational area and is to be kept free of people! Persons are not allowed in the work area during start-up or operation.
- When working in chambers, a second person must be present for safety reasons. Adequate ventilation must be ensured if there is danger of poisonous gases forming.

6.1. Electrical system

Connect the pump and install the power supply cables as described in the “Installation” section and in accordance with the VDE guidelines and applicable national regulations.

The pump must be properly protected and grounded.

Pay attention to the direction of rotation! If the direction of rotation is incorrect, the pump will not perform as specified and may be damaged.

Make sure that all monitoring devices are connected and have been tested.

ELECTRICAL hazard!
Electrical current can cause fatal injuries if not handled correctly! All pumps with free cable ends (i.e. without plugs) must be connected by a qualified electrician.

6.2. Rotation direction monitoring

The pump is checked and adjusted in the factory to ensure that the direction of rotation is correct. The connection must be made according to the wiring labels.

A test run must be performed under general operating conditions!

6.2.1. Checking the direction of rotation

The direction of rotation must be checked with a rotating field tester by a local electrician. For the correct direction of rotation, a clockwise rotating field must be available.

The pump is not approved for operation with a counter-clockwise rotating field!

6.2.2. Incorrect direction of rotation

If the direction of rotation is incorrect for direct start motors, two phases must be swapped. In the case of star-delta motors, the connections of two windings must be swapped, e.g. U1 with V1 and U2 with V2.

6.3. Level control

The level control device is to be checked to ensure that it is installed properly and the settings of the switching points are to be inspected. For the required information, please refer to the installation and operating instructions for the level control device, as well as the consulting documentation.

6.4. Operation in potentially explosive areas

An operation inside potentially explosive areas is **not** permitted!

6.5. Commissioning

Minor oil leakage in the mechanical seal on delivery is no cause for concern. However, it must be removed prior to submersion in the fluid.

Keep out of the pump's work area. Persons are not allowed in the work area during start-up or operation.

WARNING: Danger of crushing!
In portable installations, the pump can fall over when it is switched on or during operation. Make sure that the pump is positioned on a firm bearing surface and that the pump base is mounted correctly.

If the pump falls over, it must be switched off before setting it up again.

6.5.1. Initial commissioning

The following points must be checked before the initial commissioning phase:

- Inspecting the installation as described in the "Installation" section.
- Performing an insulation check as described in the "Maintenance" section.
- Checking the switching level of the level control device

6.5.2. Before switching on

LETHAL explosion hazard
If the gate valves on the suction and pressure side are closed during operation, the fluid in the hydraulic housing will be heated up by the pumping movement. Considerable pressure is created in the hydraulic housing by the heating. The pressure can cause the pump to explode! Before switching on the unit, ensure that all gate valves are open and open any closed gate valves.

Check the following:

- Cable guidance – no loops, slightly taut
- Check the temperature of the fluid and the immersion depth – see "Technical data" section
- The pump sump is to be cleaned of any coarse contaminants, especially of solids such as sand/grit, metal and stone
- Clean the pipe system on the pressure side
- Open all gate valves on the pressure side
- The fluid must be present at least up to the suction opening of the hydraulic housing.
- The pipe system must be vented by suitable venting devices in the system.
- Check if all accessories are properly fitted
- Check all level control and dry-running protection systems

6.5.3. Switching on

The pump is switched on and off manually using a separate duty point (on/off switch, switchgear) provided by the customer. A separate level control device must be installed for automatic operation.

6.5.4. After switching on

The rated current is briefly exceeded during the start-up procedure. Once the start-up procedure has completed, the operating current may no longer exceed the rated current.

If the motor does not start immediately after the pump is switched on, it must be switched off without delay. The start pauses specified in the "Technical data" section must be observed before starting up again. If the fault recurs, the pump must be immediately switched off again. The pump should only be restarted once the fault has been rectified.

6.6. Safety rules during operation

LETHAL explosion hazard
If the gate valves on the suction and pressure side are closed during operation, the fluid in the hydraulic housing will be heated up by the pumping movement. Considerable pressure is created in the hydraulic housing by the heating. The pressure can cause the pump to explode! Before switching on the unit, ensure that all the gate valves are open and open any closed gate valves.

BEWARE of rotating components!
The rotating components can crush and sever limbs. Never reach into the hydraulics or the rotating components during operation.

- **Before performing maintenance or repairs, switch off the pump, disconnect it from the mains and secure it against being switched on again without authorisation.**
- **Let the rotating components come to a stop!**

When operating the pump, always follow the locally applicable laws and regulations for work safety, accident prevention and handling electrical units. In order to ensure safe working practice, the responsibilities of employees should be clearly specified by the operator. All personnel are responsible for ensuring that regulations are observed.

The pump has rotating components. During operation, these components turn to pump the fluid. Certain materials in the pumped fluid can cause very sharp edges to form on the rotating components.

The following must be checked at regular intervals:

- Operating voltage (permissible deviation +/- 5% of the rated voltage)
- Frequency (permissible deviation +/- 2% of the rated frequency)
- Current consumption (permissible deviation between phases is a maximum of 5%)
- Voltage difference between the individual phases (max. 1%)
- Starts and stops per hour (see “Technical data” section)
- Air entry in the inlet, a deflector plate should be fitted if necessary
- Minimum water submersion, level control device, dry-running protection
- Smooth running
- Gate valves in the inlet and pressure pipes must be open.

6.6.1. Operation in the limit range

If necessary, the pump can run briefly in the limit range. The following parameters must then be strictly adhered to:

- Operating voltage (permissible deviation +/- 10 % of the rated voltage)
- Frequency (permissible deviation +3 to -5 % of the rated frequency)
- Voltage difference between the individual phases (max. 1%)

We do not recommend continuous duty in the limit range because the pump is subjected to greater wear with an increased risk of failure!

7. Decommissioning/disposal

- All work must be carried out with the greatest care.
- Proper protective clothing must be worn.
- When carrying out work in basins and/or tanks, the respective local protection measures must be observed in all cases. A second person must be present for safety reasons.
- Only lifting equipment that is in a technically perfect condition and load-carrying equipment that has been officially approved may be used for lowering and raising the pump.

RISK of fatal injury due to malfunctions!
Load-carrying and lifting equipment must be in a perfect technical condition. Work may only commence if the lifting equipment has been checked and found to be in perfect working order. If it is not inspected, fatal injuries may result.

7.1. Temporary decommissioning

For this type of shut down, the pump remains installed and is not cut off from the electricity supply. In the event of temporary decommissioning the pump must remain completely immersed so that it is protected from frost and ice. Ensure that the temperature of the fluid and in the operating area does not fall below +3 °C.

This ensures that the pump is always ready for operation. For extended downtime, a regular (monthly to quarterly) 5-minute function test should be carried out.

CAUTION!
Only perform function runs under the proper operating and usage conditions. Never run the unit dry! This can result in irreparable damage!

7.2. Decommissioning for maintenance work or storage

The system must be switched off and the pump must be disconnected from the mains by an electrician and secured against being switched on again without permission. Pumps with plugs must be unplugged (do not pull the cable!). Work on removal, maintenance and storage can then commence.

BEWARE of poisonous substances!
Pumps that pump fluids which are hazardous to health must always be decontaminated before undertaking any other work! There is otherwise a risk of fatal injury! Wear the necessary protective clothing for this work!

BEWARE of burns!
The housing components can heat up to well above 40 °C. There is a risk of burns! After switching it off, let the pump cool down to ambient temperature.

7.2.1. Removal

Pumps in stationary wet well installations with suspension unit are raised out of the pit using appropriate lifting gear. When lifting, always

hold the power cable slightly taut to prevent it from being damaged.
The operating area does not have to be emptied especially for this purpose. The gate valves in the inlet and pressure pipe must be closed to prevent the operating area overflowing or the discharge pipe being emptied.

7.3. Return delivery/storage

For shipping, the components must be packed and sealed in sufficiently large, non-tearing plastic bags to prevent leakages.
For return delivery and storage please also refer to the "Transport and storage" section!

7.4. Disposal

7.4.1. Lubricants

Oils and lubricants must be collected in appropriate tanks and properly disposed of in terms of the applicable local laws.

7.4.2. Protective clothing

Protective clothing worn for cleaning and maintenance work is to be disposed of in terms of the applicable local laws.

7.4.3. Product

Proper disposal of this product avoids damage to the environment and risks to personal health.

- Use the services of public or private waste disposal companies, or consult them for the disposal of the product or components thereof.
- More information about proper disposal can be obtained from the municipal authorities, the waste disposal authorities or from the supplier from whom the product was purchased.

8. Maintenance

ELECTROCUTION hazard!
There is a risk of fatal electric shocks when performing work on electrical devices. With all maintenance or repair work, the pump must be disconnected from the mains and secured against being switched on again without permission. Damage to the power supply cable may only be rectified by a qualified electrician.

- Before performing maintenance or repair work, switch off and dismount the pump as described in the **"Decommissioning/disposal"** section.
- After completing maintenance or repair work, the pump must be installed and connected according to the **"Installation"** section.
- The pump must be switched on as described in the **"Commissioning"** section.
  Consider the following information:
- All maintenance and repair work must be carried out by Wilo customer service, authorised service centres or by trained specialist personnel with utmost care, in a safe workplace. Proper protective clothing is to be worn.
- This manual must be available to the maintenance personnel and its instructions must be followed. Only the maintenance and repair work listed here may be performed.
  Further work and/or structural changes may only be carried out by Wilo customer service.

- When carrying out work in basins and/or tanks, the respective local protection measures must be observed in all cases. A second person must be present for safety reasons.
- Only lifting equipment that is in a technically perfect condition and load-carrying equipment that has been officially approved may be used for lowering and raising the pump. When lifting and lowering the pump, make sure that it does not become jammed. If, however, the pump does become jammed, the lifting forces must not exceed 1.2 x the pump weight! The maximum bearing capacity should never be exceeded!
  Make sure that all fastening devices, ropes and safety devices of the lifting equipment are in a technically perfect condition. Work may only commence if the lifting equipment has been checked and found to be in perfect working order. If it is not inspected, fatal injuries may result.

- Electrical work on the pump and system must be carried out by an electrician. Defective fuses must be replaced. Never attempt to repair them! Only fuses at the specified current and of the prescribed type may be used.
- When working with flammable solvents and cleaning agents, fires, naked lights and smoking are prohibited.
- Pumps that circulate fluids hazardous to health, or that come into contact with these fluids, must be decontaminated. It must be ensured that no dangerous gases can form or are present.
- If injuries involving hazardous fluid or gases occur, first-aid measures must be performed in accordance with the notices in the workplace and a doctor should be called immediately.
- Lubricants, such as oil and grease, must be collected in suitable vessels and disposed of in terms of the applicable local laws.
  Only lubricants expressly recommended by the manufacturer may be used. Oils and lubricants should not be mixed.
- Only use genuine parts made by the manufacturer.

8.1. Lubricants

8.1.1. Overview of white oils

The sealing chamber is filled with a white oil that is potentially biodegradable.
We recommend the following oil types for an oil change:

- Aral Autin PL*
- Shell ONDINA 919

- Esso MARCOL 52* or 82*
- BP WHITEMORE WOM 14*
- Texaco Pharmaceutical 30* or 40*
  All oil types marked with "*" are approved for use with foods in accordance with "USDA-H1".

Filling quantities of seal chamber
- SI 36 motor with hydraulic SA 25...: 24 l
- SI 36 motor with hydraulic SA 35...: 34 l

8.1.2. Overview of greases
The following can be used as grease:
- Esso Unirex N3

8.2. Maintenance intervals
To ensure reliable operation, various maintenance tasks must be carried out regularly.
The maintenance intervals must be determined according to the demands on the pump. If strong vibrations occur during operation, the pump or installation must be checked, regardless of the maintenance intervals.

8.2.1. Intervals for normal operating conditions

4,000 operating hours
- Visual inspection of the power supply cable
- Visual inspection of accessories
- Visual inspection of the housing for wear
- Functional inspection of all safety and control devices
- Inspection of the switching devices/relays in use
- Changing the oil in the seal chamber

15,000 operating hours or after ten years, whichever is earlier
- General overhaul

8.2.2. Intervals for difficult operating conditions
For difficult operating conditions, the maintenance intervals stated should be shortened accordingly. If this is the case, please contact Wilo customer service. If the pumps are to be used in difficult conditions, we also recommend that you take out a maintenance contract.
The following are considered difficult operating conditions:
- Large quantities of fibrous materials or sand/grit in the fluid
- Turbulent inlet (caused by air entering or cavitation, for example)
- Highly corrosive fluids
- Highly gaseous fluids
- Unfavourable duty points
- Operation at risk from water hammers

8.2.3. Maintenance tasks recommended to ensure smooth operation
We recommend that the current consumption and operating voltage are checked regularly during all phases. These values remain constant during normal operation. Slight fluctuations are a result of the composition of the pumped fluid. The current consumption can assist in early detection and correction of damage and/or faulty operation in the impeller, bearings and/or the motor. Larger voltage fluctuations strain the motor winding and can lead to a failure of the pump. Regular checks can therefore prevent greater damage from occurring later and reduce the risk of a total failure. We recommend using remote monitoring for the regular checks. Please contact Wilo customer service concerning this matter.

8.3. Maintenance tasks
Before performing maintenance:
- Disconnect the pump from the electricity supply and secure it to prevent accidental activation.
- Let the pump cool down and clean it thoroughly.
- Any drops must be removed immediately!
- Make sure that all operating components are in good condition.

8.3.1. Visual inspection of the power supply cable
The power supply cables must be examined for bubbles, cracks, scratches, chafed areas and/or crushed sections. If damage is found, the pump must be shut down immediately and the damaged power supply cable replaced.
The cables may only be changed by Wilo customer service or an authorised/certified service centre. The pump may not be used again until the damage has been adequately rectified!

8.3.2. Visual inspection of accessories
Check if accessories are fitted correctly and working properly. Loose and/or defective accessories should be repaired immediately or replaced.

8.3.3. Visual inspection of the housing for wear
The housing components must not be damaged. If there is visible damage to the housing, consult Wilo customer service.

8.3.4. Functional test of safety and monitoring devices
Monitoring devices include temperature sensors in the motor, sealing chamber monitors, overload relays, overvoltage relays, etc.
- Overload relays and other tripping devices can generally be triggered manually for test purposes.
- To inspect the electrode or the temperature sensor, the pump must be cooled to ambient temperature and the electrical supply cable of the monitoring device in the switchgear must be disconnected. The resistance of the monitoring device can then be measured with an insulation tester (measuring voltage = 2.5 V(DC)).
  The following values should be measured:
  - Pt100 sensor: Pt100 sensors have a value of 100 Ω at 0 °C. Between 0 °C and 100 °C, this value increases by 0.385 Ω every 1 °C. At an ambient temperature of 20 °C, they reach a value of 107.7 Ω.
  - Electrode: This value must approach 2 MΩ. If the value is lower than 33 kOhm, there is water in the oil or motor/terminal compartment. Also

observe the instructions of the optional evaluation relay.

8.3.5. Inspection of the switching devices/relays in use

Please refer to the respective operating manual for the procedure for checking the switching devices/relays used. Defective devices must be replaced immediately as they cannot ensure a safe operation of the pump.

8.3.6. Changing the oil in the seal chamber

The sealing chamber has two separate holes for draining and filling the sealing chamber.

RISK of injury from hot and/or pressurised oil! After the pump is switched off, the oil is still hot and pressurised. This can cause the screw plug to be ejected and hot oil to escape. There is a risk of injury or burns! First let the oil cool down to ambient temperature and always unscrew the screw plugs slowly.

Fig. 6.: Plugs on sealing chamber

–	Drain hole screw plug
+	Filler hole screw plug

1. Lay the pump horizontally on a firm surface with the plug facing upwards.
   Make sure that the pump cannot fall and/or slip away!
2. Remove the plastic cover (if present) and carefully and slowly unscrew the plugs (– and +).
3. Drain off lubricant by turning the pump until the opening faces downwards. Collect the lubricant in a suitable tank and dispose of according to the requirements in the "Disposal" section.
4. Turn the pump back until the opening is facing upwards again.
5. Clean the plug (–), fit with a new sealing ring and screw it in again.
6. Pour in new lubricant through the opening in the plug (+). The oil must reach up to the lower edge of the opening. Use the recommended lubricants only.
7. Clean the plug (+), fit with a new sealing ring and screw it in again.
8. Fit the plastic covers (if present) and line with an acid-resistant sealant.

8.3.7. General overhaul

During a general overhaul, the motor bearings, shaft seals, O-rings and power supply cables are inspected and replaced as required in addition to normal maintenance work. This work may only be conducted by the manufacturer or an authorised service centre.

8.4. Repairs

When carrying out repairs, you must:

- Disconnect the pump from the electricity supply and secure it to prevent accidental activation.
- Let the pump cool down and clean it thoroughly.
- Ensure that all operating components are in good condition.
- Always replace O-rings, seals and screw fasteners (washers, "Nord Lock" washers).
- The specified tightening torques must be adhered to.
- Never use brute force during this work!

8.4.1. Use of screw locking

All screws generally have some form of locking. Always renew it after disassembly.
There are various ways to lock screws:

- Liquid screw adhesive, e.g. with Loctite 243
- Mechanical screw locking with a "Nord Lock" washer

Liquid screw locking

The liquid screw lock can only be released by heating it up (to around 300 °C). The components concerned must be cleaned thoroughly and coated with the adhesive when refitted.

Mechanical screw locking

The "Nord Lock" washer is generally only used with Geomet-coated screws in strength category 10.9.
"Nord Lock" washers must not be used to secure stainless steel screws!

8.4.2. What repairs may be carried out?

- Changing the impeller
- Changing the hydraulics

BEWARE of sharp edges!
Sharp edges can form on the impellers and the hydraulic opening. There is a risk of injuries! Wear the necessary protective clothing, e.g. safety gloves.

Changing the hydraulics and impeller

Fig. 7.: Component overview

1	Nuts for fixing the hydraulics	3	Impeller
2	Hydraulics	4	Fastening screw for impeller, incl. washer and "Nord Lock" washer

1. Place the pump vertically on a firm surface.
   Make sure that the pump cannot fall and/or slip away!
2. Unscrew the nuts (1) for removing the hydraulics from the sealing housing.
3. Secure the hydraulics (2) with suitable equipment and pull the motor with the impeller upwards. It may be necessary to use lifting gear with sufficient load bearing capacity!
4. Lay the motor horizontally on a secure surface and prevent it from sliding away.

5. Fix the impeller (3) with suitable equipment and remove the fastening screw (4) incl. washer and the “Nord Lock” washer.
   Pay attention to the screw locking!

6. Remove the impeller (3) from the shaft using a suitable extractor.
7. Clean the shaft.
8. Attach a new impeller to the shaft.
   Make sure that the sliding surfaces do not become damaged.

9. Apply a new fastening screw (4) with the “Nord Lock” washer and a washer and refit. Fix the impeller and tighten the fastening screw.
   Pay attention to the specified tightening torques!

10. Raise the motor with the impeller and swing them over the hydraulics. It may be necessary to use lifting gear with sufficient load bearing capacity!
11. Slowly lower the motor onto the hydraulics and fasten the hydraulics again with the nuts (1).
12. Test: It must be possible to turn the impeller by hand.

9. Troubleshooting and possible solutions

In order to prevent damage or serious injury while rectifying pump faults, the following points must be observed:

- Only attempt to rectify a fault if you have qualified personnel. This means that each job must be carried out by trained specialist personnel. For example, electrical work must be performed by a trained electrician.
- Always secure the pump against an accidental restart by disconnecting it from the mains. Take appropriate safety precautions.
- Always have a second person on hand to ensure that the pump is switched off in an emergency.
- Secure rotating components to prevent injury.
- Unauthorised modifications to the pump are made at the operator’s own risk and release the manufacturer from any warranty obligations.

Fault: The unit will not start

1. Electricity supply interrupted, short-circuit or earth fault in the cable or motor windings
   - Have the motor and wires checked by a specialist and replaced if necessary
2. Fuses, the motor protection switch and/or monitoring devices are triggered
   - Have a specialist inspect the connections and correct them as necessary.
   - Have the motor protection switches and fuses installed or adjusted according to the technical specifications, and reset monitoring equipment.
   - Check that the impeller runs smoothly. Clean or free it as necessary
3. The electrode (optional) has interrupted the power circuit (operator-related)
   - See fault: Leakage of the mechanical seal, sealing chamber monitor reports a fault or switches the pump off

Fault: The unit starts, but the motor protection switch triggers shortly after commissioning

1. The thermal trigger on the motor protection switch is not correctly set
   - Have a specialist compare the setting of the trigger with the technical specifications and correct it as necessary
2. Increased power consumption due to major voltage drop
   - Have an electrician check the voltage on each phase and rewire if necessary
3. Two-phase operation
   - Have a specialist inspect the connection and correct it as necessary
4. Excessive voltage differences on the three phases
   - Have a specialist inspect the connection and the switching system and correct as necessary
5. Incorrect direction of rotation
   - Swap the two phases from the mains supply
6. Impeller impeded by adhesive material, blockages and/or solid matter, increased current consumption
   - Switch off the pump, secure it against being switched on again and free the impeller or clean the suction port
7. The fluid is too dense
   - Contact the manufacturer

Fault: The unit runs but does not pump

1. No fluid
   - Open the tank inlet or gate valve
2. Inlet blocked
   - Clean the supply line, gate valve, suction piece, suction port or suction strainer
3. Impeller blocked or obstructed
   - Switch off the pump, secure it against being switched on again and free the impeller
4. Defective hose or pipeline
   - Replace defective components
5. Intermittent periodic duty
   - Check the switching system

Fault: The unit runs, but not within the specified operating parameters

1. Inlet blocked
   - Clean the supply line, gate valve, suction piece, suction port or suction strainer
2. Gate valve in the pressure pipe closed
   - Fully open the gate valve
3. Impeller blocked or obstructed
   - Switch off the pump, secure it against being switched on again and free the impeller
4. Incorrect direction of rotation
   - Replace two phases on the mains supply
5. Air in the system
   - Check the pipelines, pressure shroud and/or hydraulics, and vent if necessary

6. Pump pumping against excessive pressure
   - Check the gate valve in the pressure pipe. If necessary, open it completely, use a different impeller or contact the manufacturer
7. Signs of wear
   - Replace worn components
8. Defective hose or pipeline
   - Replace defective components
9. Inadmissible levels of gas in the fluid
   - Contact the manufacturer
10. Two-phase operation
    - Have a specialist inspect the connection and correct it as necessary
11. Excessive decrease in the water table during operation
    - Check the supply and capacity of the system, and inspect the level control settings and functionality

Fault: The unit does not run smoothly and is noisy

1. Pump is operating in an inadmissible range
   - Check the operational data of the pump and correct if necessary and/or adjust the operating conditions
2. The suction port, strainer and/or impeller is blocked
   - Clean the suction port, strainer and/or impeller
3. The impeller is obstructed
   - Switch off the pump, secure it against being switched on again and free the impeller
4. Inadmissible levels of gas in the fluid
   - Contact the manufacturer
5. Two-phase operation
   - Have a specialist inspect the connection and correct it as necessary
6. Incorrect direction of rotation
   - Replace two phases on the mains supply
7. Signs of wear
   - Replace worn components
8. Defective motor bearing
   - Contact the manufacturer
9. The pump is installed under mechanical strain
   - Check the installation, use expansion joints if necessary

Fault: Leakage of the mechanical seal, sealing chamber monitor reports a fault or shuts down the unit

1. Condensation build-up due to extended storage and/or temperature fluctuations
   - Operate the pump briefly (max. 5 min.) without electrode
2. Increased leakage when running in new mechanical seals
   - Change the oil
3. Defective electrode cables
   - Replace the electrode
4. Mechanical seal is defective
   - Replace the mechanical seal and contact the manufacturer!

Further steps for troubleshooting

If the points listed here do not rectify the fault, contact Wilo customer service. It can help you as follows:

- Telephone or written support from Wilo customer service
- On-site support from Wilo customer service
- Inspection or repair of the pump at the factory

Please note that you may be charged for some services provided by Wilo customer support. For more details, please contact Wilo customer service.

10. Appendix

10.1. Tightening torques

Stainless steel screws (A2/A4)		
Thread	Tightening torque	
	Nm	kp m
M5	5.5	0.56
M6	7.5	0.76
M8	18.5	1.89
M10	37	3.77
M12	57	5.81
M16	135	13.76
M20	230	23.45
M24	285	29.05
M27	415	42.30
M30	565	57.59

Geomet-coated screws (strength 10.9) with “Nord Lock” washer		
Thread	Tightening torque	
	Nm	kp m
M5	9.2	0.94
M6	15	1.53
M8	36.8	3.75
M10	73.6	7.50
M12	126.5	12.90
M16	155	15.84
M20	265	27.08

10.2. Spare parts

Spare parts must be ordered via a local specialist retailer and/or Wilo Customer Service. To avoid queries and incorrect orders, all data on the rating plate should be submitted with each order.

Subject to change without prior notice!

wilo

Pioneering for You

Wilo China Ltd.
No. 10 Zhaofeng 2nd Street, Zhaofeng Industrial Zone (Airport Industrial Zone C)
Zhaoquanying, Shunyi District
101300 Beijing
China
T +86 10 52347888
F +86 10 52347666
wilo.info@wilo.com.cn
www.wilo.com.cn