INSTALLATION AND OPERATION INSTRUCTIONS FOR SPLIT CASE PUMPS – ASP SERIES

ENGLISH

WILO MATHER AND PLATT PUMPS PVT. LTD.
SHAILA TOWER, 3RD FLOOR
J1/16, EP BLOCK, SECTOR V, SLAT LAKE
KOLKATA – 700091, INDIA

N.B- Subject to change without prior notice

CONTENTS

1. General Safety Instructions..... 04
2. General..... 05
   2.1 Uses..... 05
   2.2 Pump Description..... 05
   2.3 Nomenclature..... 05
   2.4 Technical Data.....05
   2.5 Noise and Vibration Level.....05
3. Safety..... 06
   3.1 Danger Symbols used in these Operating Instructions..... 06
   3.2 Staff Training..... 06
   3.3 Risks Incurred by Failure to Comply with the Safety Precautions..... 06
   3.4 Safety Precautions for the Operator..... 06
   3.5 Safety Information for Inspection and Assembly..... 06
   3.6 Unauthorized Modification and Manufacture of Spare Parts..... 06
   3.7 Unauthorized Operating Methods..... 06
4. Transport and Storage..... 07
   4.1 Transport..... 07
   4.1.1 General Recommendations..... 07
   4.1.2 Fitting Carrying Cables..... 07
   4.2 Storage.....08
   4.3 Preparation for Shipment.....08
5. Installation..... 09
   5.1 Preparations..... 09
   5.1.1 Unpacking and Inspection..... 09
   5.1.2 General Rules for Pump Location..... 09
   5.2 Foundations..... 09
   5.3 Alignment..... 11
   5.4 Piping..... 13
   5.4.1 Suction Piping..... 13
   5.4.2 Discharge Piping.....13
   5.5 Electrical Connection.....16
   5.6 Instrumentation.....16
6. Operations and Maintenance..... 16
   6.1 Priming..... 15
   6.2 Final Check before Start-up.....16
   6.3 Starting Procedures..... 16
   6.4 Stopping Procedure..... 16
   6.5 Operation.....17
   6.6 General Rules on Pump Operation..... 17
   6.6.1 Running a Pump Dry.....17
   6.6.2 Throttling at the Pump Suction..... 17
   6.6.3 Restarting Motor-driven Pump Stopped by Power Failure..... 18
   6.7 Checks to be made while Pump is Running..... 19
7. Maintenance..... 19
   7.1 General Information..... 19
   7.2 Daily Observation..... 19
   7.3 Semi-annual Inspection..... 20
   7.4 Annual Inspection..... 20
   7.5 Complete Overhaul..... 20
   7.6 General Maintenance – Wear Rings..... 20
   7.7 Shaft Seal..... 21
8. Dismantling/Reassembly.....21
   8.1 Dismantling..... 21
   8.2 Rotating Element Reassembly..... 22

8.3 Pump Reassembly…….....23
8.4 Recommended Lubricants……..... 28
9. Pump Sealing……..... 28
9.1 Stuffing Box Packing……..... 28
9.2 Installing Soft Packing……..... 29
9.3 Dimension of Gland Packing..... 30
9.4 Mechanical Seals…..……..... 30
9.5 Sealing Problems, Causes and Solutions.....31
10. Locating Troubles……..... 32
11. Spare Parts……..... 33
12. Sectional Drawings……..... 34
Appendix A (Recommended Tightening Torques)……..... 39
Appendix B (Useful Formulae)……..... 40
Appendix C (Material Equivalent Chart)……..... 41
Appendix D (Product Range)...…….....…….. 42

1. General Safety Instructions

1. Inspect unit for shipping damage.
2. Read all instructions carefully.
3. Always disconnect all electrical power when handling pump.
4. Do NOT run the pump dry or against a closed discharge. This will damage the pump.
5. Do NOT operate this equipment at any flow, head, speed, temperature and maximum inlet pressure other than those for which the pump was originally purchased.
6. Do NOT pump any other liquid than the one which the pump was originally purchased without the consent of M&P.
7. Disregard of the warnings can result in pump failure and serious personal injury or death.
8. The area around the pump unit must be kept clear of debris to reduce the possibility of fire or explosion due to debris coming into contact with hot surfaces of the unit.
9. Do NOT operate the unit with any of the supplied guarding removed or disabled.
10. Access to the equipment should be restricted to the personnel responsible for installation, operation and maintenance. These personnel must be trained, adequately qualified, and supplied with the appropriate tools for their respective tasks.
11. All personnel responsible for installation, operation, or maintenance of the equipment, have access to and study the instruction manual before any work is done and that they will comply with all local and industry based safety instructions and regulations.
12. Do NOT wear loose or frayed clothing or jewellery that could catch on the controls or become trapped in the equipment.
13. The instructions included in this manual cover standard design of the equipment. This book does not provide complete details and common deviations. Additional information may be obtained by contacting M&P.
14. In case where there is any doubt as to the functioning or adjustment of any parts of the equipment should be consulted immediately with M&P.

MECHANICAL HAZARDS

Crushing Hazards

a) Use only qualified personnel to lift or move unit at any time.
b) Never lift unit using hooks or slings on shafts.
c) Never place eyebolts in tapped holes except for removal of upper case half only.
d) Use proper lifting techniques when manually lifting components.
e) Do not place hands under component in such a way that the component would fall on the hands if dropped.

Shearing Hazards

a) Do not place fingers, hands, arms, etc. into the suction or discharge openings or into any other opening (such as the air relief valve hole). To prevent ingress of any objects, retain the protective covers or packaging in place until the removal is necessary for installation. If the packaging or suction or discharge covers are removed for inspection purposes, replace afterwards to protect the pump and maintain safety.

Entanglement Hazards

a) The area between the stuffing box and bearing bracket is covered with shaft guards. Do not remove the guard. Do NOT wear loose or frayed clothing or jewellery that could catch on the controls or become trapped in the equipment.

Impact Hazards

a) Do not use excessive force when adjusting packing glands or any other bolts as wrench slippage can result in impact of the hand against the casing.

Electrical Hazards

a) Use only qualified electricians for electrical installation and maintenance.

b) Refer to manuals provided with electrical components and disconnect power supply as recommended for servicing.
c) Ground the unit according to local codes.

Thermal Hazards

a) Most surfaces on the driver can become hot during operation. The stuffing box and bearing bracket areas on the pump can become hot in the event of a malfunction or maladjustment. These surfaces may retain hot for some time after the unit has been shut down. Use care when touching these surfaces and wear protective gloves if necessary to touch these surfaces when hot.
b) If the packing is too tight, the drain water from the stuffing box can become hot enough to scald. Ensure that drain water is not excessively hot before extensive contact.

Noise Hazard

a) Noise levels, especially for diesel engine driven units, can exceed safe levels. Refer to the noise level published in the accompanying documentation, and, if this noise level exceeds local code or safe levels, place the unit in a controlled access area and provide ear protection to personnel authorised to be in this area.

Personal Protective Equipment

a) Wear helmet and eye protection at all time in the vicinity of the unit. Wear ear protection when loud units are running.

2. General

Assembly and installation should only be carried out by qualified personnel

2.1 Uses

Pumps of M&P series are used to transport clean or slightly polluted, non-aggressive liquids containing no solid components in:
– Warm water heating systems
– Chilled and cooling water systems
– Water systems for industrial use
– Industrial circulating systems, Water supply, process fluids
– Heat transfer media circulation
– Irrigation
– Fire protection

2.2 Pump Description

Single stage centrifugal pump, pump casing split axially for easy maintenance, sealed by mechanical seal or packed gland.

2.3 Nomenclature

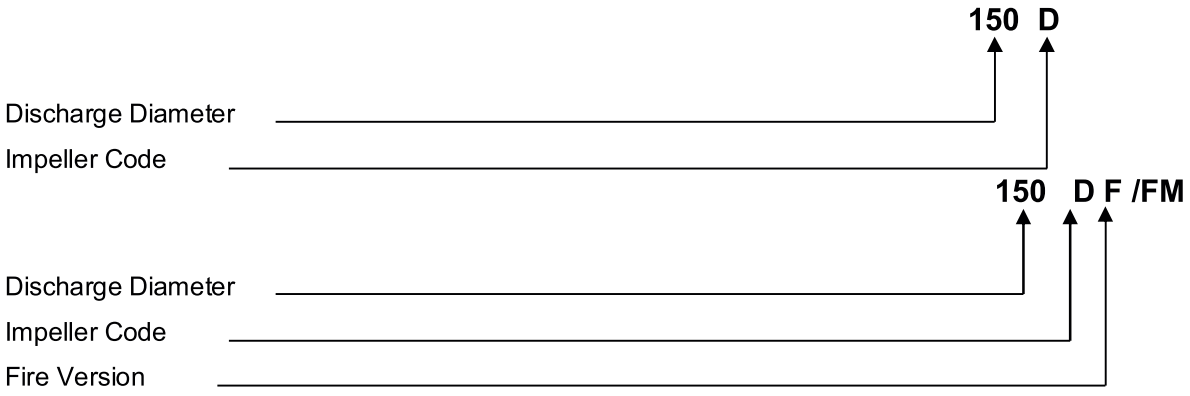

3. Safety

These instructions contain important information which must be followed when installing and operating the pump. These operating instructions must therefore be read before assembly and commissioning by the installer and the responsible operator.
Both the general safety instructions in the "Safety precautions" section and those in subsequent sections indicated by danger symbols should be carefully observed.

3.1 Danger symbols used in these operating instructions

Safety precautions in these operating instructions which, if not followed, could cause personal injury are indicated by the symbol:

when warning of electrical voltage with:

The following symbol is used to indicate that by ignoring the relevant safety instructions, damage could be caused to the pump/machinery and its functions:

ATTENTION !

3.2 Staff training

The personnel installing the pump must have the appropriate qualifications for this work.

3.3 Risks incurred by failure to comply with the safety precautions

Failure to comply with the safety precautions may endanger persons and pump/system. Failure to comply with the safety precautions could also invalidate any claim for damages.
In particular, lack of care may lead to problems such as:
– Injury resulting from electrical or mechanical factors.
– Failure of important pump or machinery functions,
– Failure of prescribed maintenance and repair procedures.
– Danger to the environment through emission of hazardous substances.

3.4 Safety precautions for the operator

Existing regulations for the prevention of accidents must be followed.
Dangers caused by electrical energy are to be excluded. Electric motor /diesel engine suppliers are to be observed for this.

3.5 Safety information for inspection and assembly

The operator is responsible for ensuring that inspection and assembly are carried out by authorised and qualified personnel who have studied the operating instructions closely.
Work on the pump/machinery should only be carried out when the machine has been brought to a standstill.

3.6 Unauthorized modification and manufacture of spare parts

Alterations to the pump or installation may only be carried out with the manufacturer's consent. The use of original spare parts and accessories authorised by the manufacturer will ensure safety. The use of any other parts may invalidate claims invoking the liability of the manufacturer for any consequences.

3.7 Unauthorized operating methods

The operating safety of the pump or installation supplied can only be guaranteed if it is used in accordance with IOM. The limiting values given in the catalogue or data sheet must neither be exceeded nor allowed to fall

below those specified.

4. Transport and Storage

4.1 Transport

4.1.1 General recommendations

Existing regulations for the prevention of accidents must be followed.
– The wearing of gloves, hard-toed boots and hard hats is compulsory for all transport work.
– Wooden cases, crates, pallets or boxes may be unloaded with fork-lift trucks or using hoisting slings, depending on their size and construction.

ATTENTION ! – A hoist complying with local regulations must be used to lift heavy parts weighing more than 30 kg. The load-bearing capacity must be adapted to the weight.
– Only lifting hooks or shackles which comply with local safety regulations may be used to lift machines or parts using lugs. The carrying chains or cables must never be passed over or through the lugs or over sharp edges without protection.
– Lifting hooks, lugs or shackles may not be exposed to cantilever loads. Their load axis must lie in the direction of the tractive forces.
When lifting, ensure that the load limit of a cable is reduced for angled pulling.
– The safety and efficiency of a cable are best guaranteed if, wherever possible, all load-bearing elements are stressed vertically.
If necessary a lifting arm should be used to which the carrying cable can be attached vertically.
– It is absolutely forbidden to stand beneath a raised load. In this connection the safety zone must be marked out such that there is no danger if the load or part there of slips or the hoist breaks or tears. A load should never remain in a raised position for longer than necessary. Accelerating and braking during the lifting process must be performed such that there is no danger to persons.
– If a block and tackle or a similar hoist is used, it must be ensured that the load is lifted vertically. The raised load must be prevented from swinging. This can be achieved, for example, by using a second block and tackle, whereby the angle of pull of both should be less than 30° to the vertical.

4.1.2 Fitting the carrying cables

ATTENTION ! The equipment is all assembled for proper alignment and if dropped or mistreated in any way misalignment and poor performance will result. The hoist used must have a load-bearing capacity which corresponds to the weight of the pump. The weight of the pump can be taken from the catalogue or data sheet of the pump. To avoid any distortion, please lift the pump as shown.

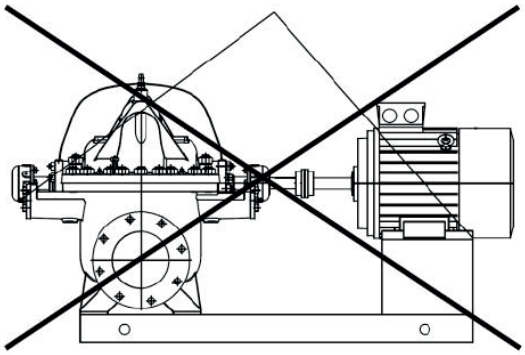

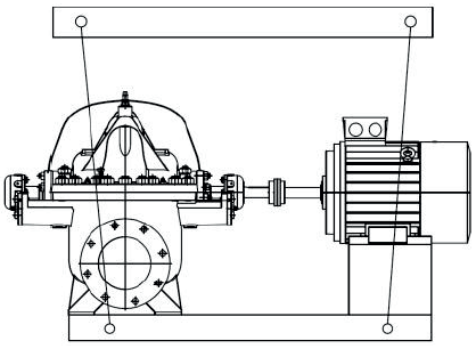

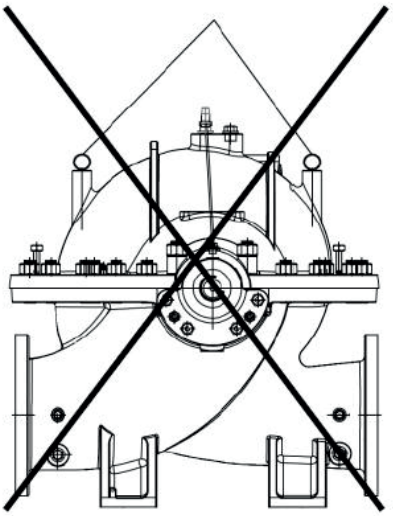

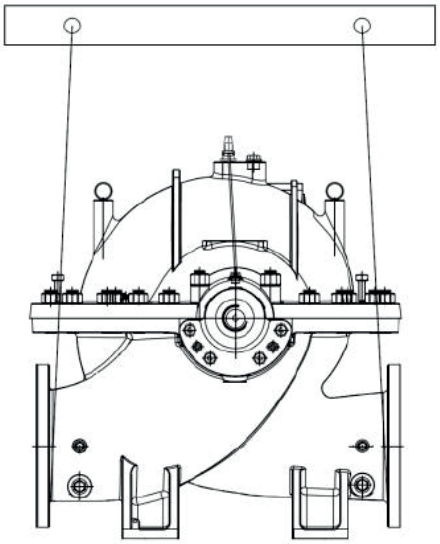

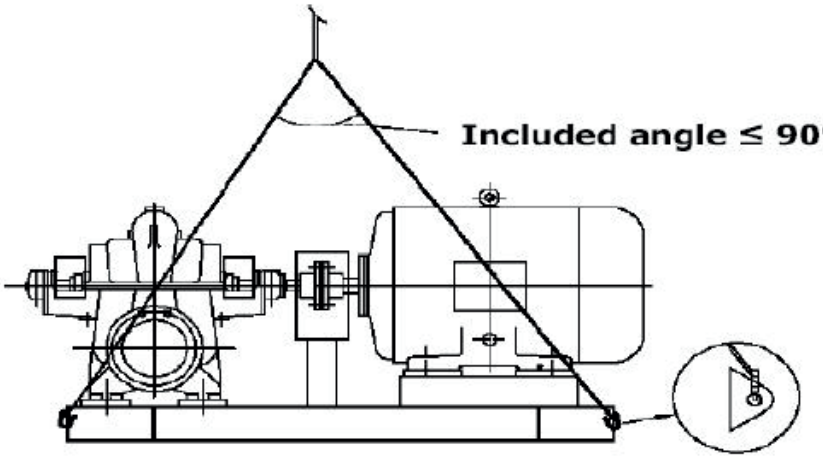

Safe working load of wire ropes reduces with increase in included angle of wire ropes as shown below.

Reduction of lifting Capacity with increase in included angle between legs					
Included angle	0°	30	60	90	120
Lifting Capacity	100%	95%	75%	70%	50%

4.2 Storage

Short Term: (less than three months)- when it is necessary to store a pump for a short time before it can be installed, place it in a dry, clean, well-ventilated place, free from vibration, moisture and rapid or wide variations in temperature. Protect the bearings and couplings against sand, grit, or other foreign matter. To prevent rusting or seizing, lubricate the unit and turn the rotor several revolutions by hand at least once a

week.

Long Term: (more than three months). Additional precautions are required if the pump is scheduled for storage for an extended period of time. All the rotating parts are to be coated with a suitable protective fluid in order to keep the parts from rusting. For storage in excess of one year contact M&P.

ATTENTION ! **Note**: Improper storage could result in non-warranty covered restoration of the equipment.

5. Installation

5.1 Preparations

5.1.1 Unpacking and Inspection

The pump must be checked for compliance with the information on the delivery note. M&P must be notified immediately of any damage or missing parts. Check crates, boxes and wrappings for spare parts or accessories which could be enclosed with the pump.

5.1.2 Site

The pump must be installed protected from the elements in a frost and dust. All flanges and exposed finished metal parts are cleaned of foreign matter and treated with an anticorrosion compound, such as grease, vaseline, or heavy oil. For protection during shipment and erection, all pipe flanges, pipe openings and nozzles are protected by wooden service flanges or by screwed-in metal plugs, which prevent the entrance of dirt, dust, moisture or foreign matter. All small piping is cleaned, and protective guards are installed, if necessary.

ATTENTION !

5.1.3 General Rules for Pump Location

Pumps installed indoors, in poorly lighted and cramped locations, or where dirt and moisture accumulate, are improperly placed for dismantling and repair; they will be neglected and both pump and driver may become damaged. Pumps should be placed in light, dry and clean locations whenever possible.

ATTENTION !

If a motor driven unit will be operated in a damp, moist, or dusty location, the proper motor must be selected. Pumps and drivers designed for outdoor installation are specially constructed to withstand exposure to weather and usually are readily available for overhaul.

Sufficient room must always be provided for dismantling the pump; that is, enough headroom must be allowed so that the upper half of the casing may be lifted free of the rotor. For large pumps with heavy casings and rotors, a travelling crane or facilities for attaching a hoist should be provided over the pump location.

Pumps should be located as close as possible to the source of liquid supply. When possible, it is advisable to locate the unit below pumping level of the water, to facilitate priming. The manufacturer's recommendations for suction conditions should always be followed.

For most pumping units, more satisfactory service is obtained when rigid foundations are provided.

The suction supply system must provide the pump with Net Positive Suction Head (NPSH) equal to or greater than that required by the pump at any capacity on its operating curve.

5.2 Foundations

The correct planning and execution of stable concrete foundations is a deciding factor for the low-noise operation of pumps.
To increase the stabilizing mass and to compensate for unbalanced forces, direct and rigid connection between the pump unit and the foundation block is recommended. The foundation should be sufficiently substantial to absorb any vibration and to form a permanent, rigid support for the base plate. This is important in maintaining the alignment of a direct connected unit. In building the foundation, the top of the foundation

should be left approximately one inch low to allow for grouting. Foundation bolts of the proper size should be embedded in the concrete, located by template. A pipe sleeve about 2 ½ diameters larger than the bolt should be used to allow movement for the final positioning of the bolts.

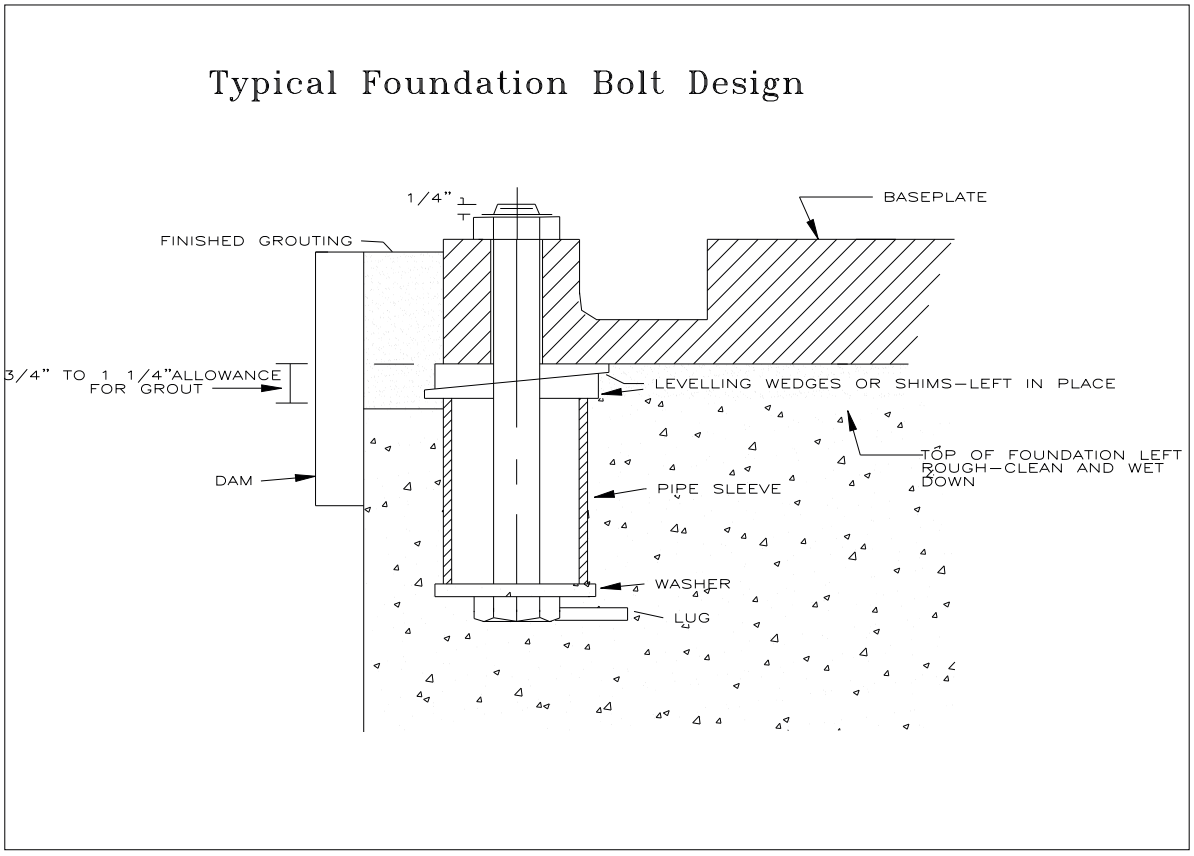

Installation for Motor Drive:

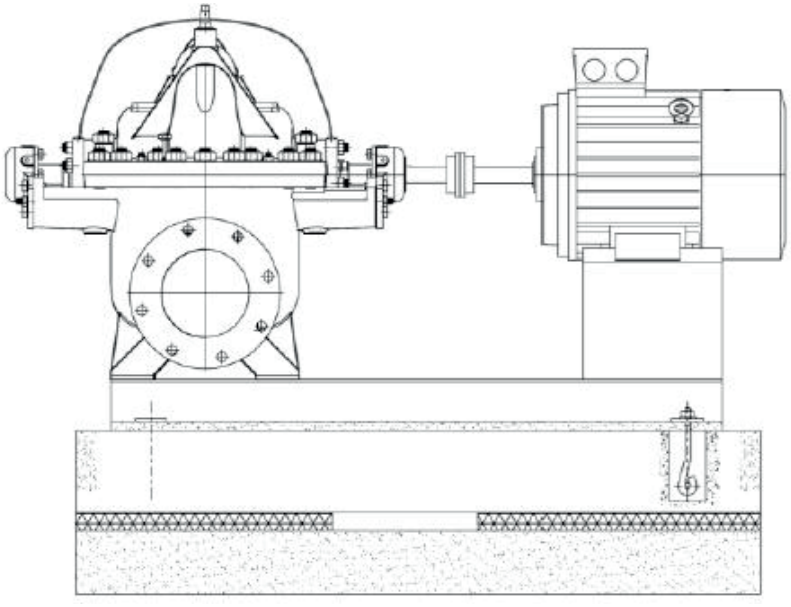

5.3 Alignment

Reliable, trouble-free, and efficient operation of a pumping unit requires correct alignment of pump and driver shaft. Misalignment may be the cause of:

- Noisy pump operation
- Vibration
- Premature bearing failure
- Excessive coupling wear

When the unit is received with the pump and driver mounted on a common base plate, it should be placed on the foundation and the coupling halves disconnected. The coupling should not be reconnected until all alignment operations have been completed.
A gap of about 20 to 40mm should be allowed between the base-plate and the foundation to allow for grouting. Adjust the metal supports or wedges until the shafts of pump and driver are level. Check the coupling faces as well as the suction and discharge flanges of the pump for horizontal or vertical position by means of a sprit level. Correct the positions, if necessary, by adjusting the supports or wedges under the base-plate as required. The faces of the coupling halves should be spaced far enough apart such that they cannot strike each other. Due allowance should be made for wear of the thrust bearings. A minimum dimension for the separation of the coupling halves is usually specified by the coupling manufacturer and reference should be made to their instruction Sheet to ensure gap is correct.

Check for angular alignment by inserting a taper gauge or feelers between the coupling faces and comparing the distance between the faces at four points spaced at 90^0 intervals around the coupling. The unit will be in angular alignment when measurements show that coupling faces are the same distance apart at all points.

Check for parallel alignment by placing a straight edge across both coupling rims at the top, bottom and at both sides. The unit will be in parallel alignment when the straight edge rests evenly on the rim at all positions. Allowance may be necessary for temperature changes and for coupling halves that are not of the same outside diameter. Care must be taken to have the straight edge parallel to the axes of the shafts.

Angular and parallel misalignment is corrected by adjusting the shims under the pump or driver, or relocating positioned units on the base-plate. After each change, it is necessary to check the alignment of the coupling halves. Adjustment in one direction may disturb adjustment already made in another direction. When alignment is correct, the foundation bolts should be tightened evenly but not too firmly. The unit can then be grouted to the foundation. Foundation bolts should not be fully tightened until the grout has hardened - usually about 48 hours after pouring. After the grout has set and foundation bolts have been properly tightened, the unit should be checked for parallel and angular alignment and, if necessary, corrective measures taken. Alignment should be checked again after unit has been connected to the pipe work.

Direction of rotation of the driver should be checked to make certain that it matches that of the pump. Pump direction of rotation is indicated by a direction arrow on the pump casing. The coupling halves can then be reconnected. Once the pump has been running for about ten hours, the coupling halves should be given a final check for misalignment due to pipe strains or changes in temperature. If the alignment is correct, both pump and driver should be doweled to the base plate.

Both suction and discharge pipes should be supported independently near the pump to ensure that when flange bolts are tightened no strain will be transmitted to the pump casing. A check valve and a gate valve should be installed in the discharge line. The check valve, placed between the pump and the gate valve, is to protect the pump from excessive pressure and to prevent water running back through the pump in case of failure of the driver. The gate valve is used in priming, starting and when shutting down the pump. Except on axial flow and mixed flow pumps, it is advisable to close the gate valve before stopping the pump. This is especially important when the pump is operated against a high static head. If taper pipes are used to increase the size of discharge piping, they should be placed between the check valve and pump.
From existing manual

Coupling Alignment:

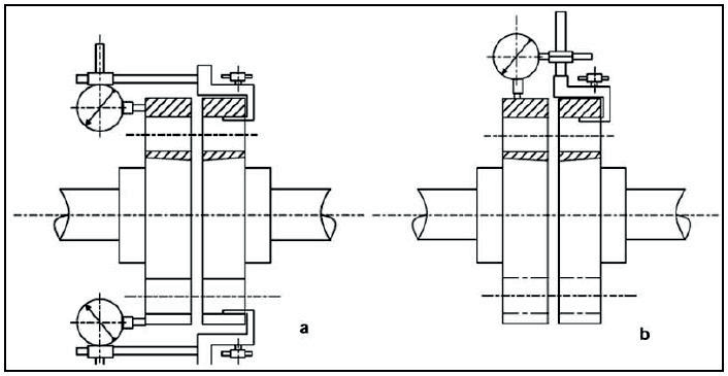

ATTENTION ! Incorrect alignment of the set can result in damage to coupling and set!

In accordance with the statutory provisions the coupling is to be protected by the safety device such that accidents caused by accidentally touching rotating parts are avoided.

Incorrect Alignment:

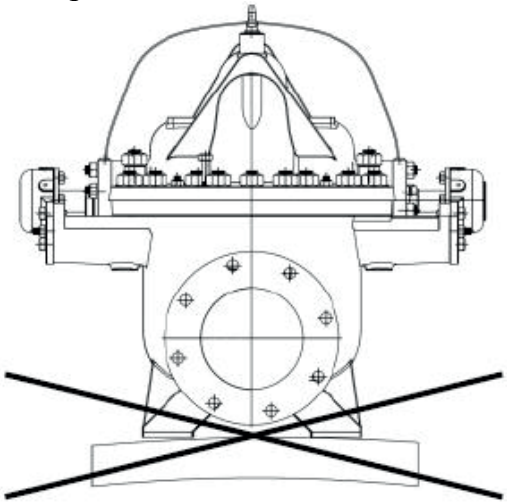

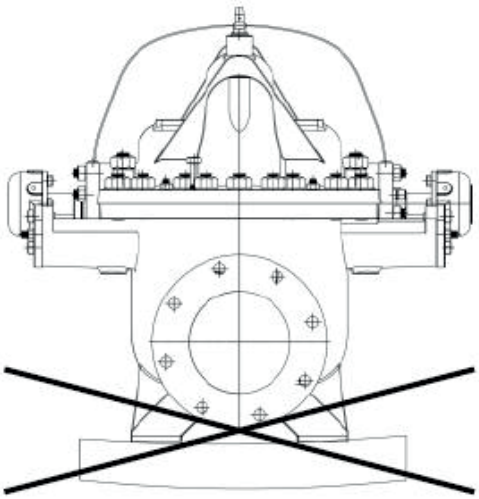

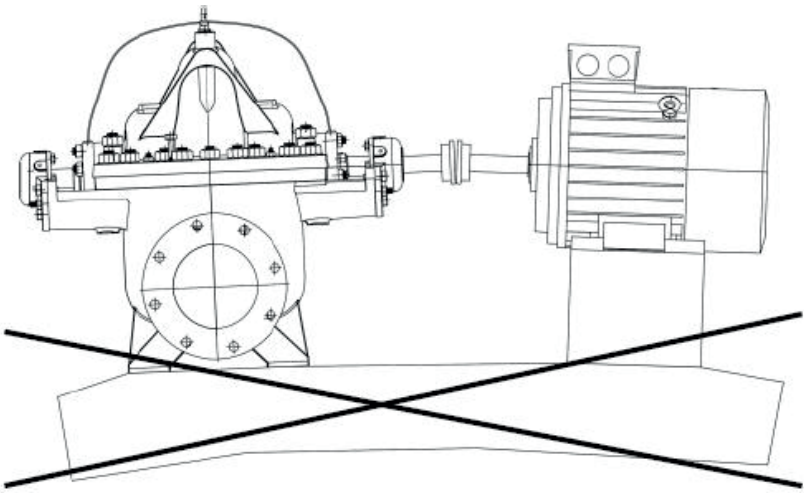

5.4 Piping

Under no circumstances may the pump be used as a fixed support for the pipe! Satisfactory operation cannot be maintained when piping imposes forces and torques on the pump. **Piping should be independently supported near the pump so that no strain will be placed on the pump casing**. A pump can be easily sprung and pulled out of position by drawing up on the bolts in the piping flanges. The alignment can be seriously affected in this way and it is important, therefore, that the alignment should be checked again after the pipes are finally fitted. Piping flanges must be brought squarely together before the bolts are tightened. The suction and discharge piping and all associated valves and similar equipment should be supported and anchored near the pump, but independent of it, so that no strain is transmitted to the pump casing. Where any noise is objectionable, pump should be insulated from the piping with rubber connections. Always keep pipe size as large as possible and use a minimum of fittings to reduce friction losses.

ATTENTION !

5.4.1 Suction Piping

The major source of trouble in centrifugal pump installations, other than misalignment, is a faulty suction line. The suction piping should be as short and as direct as possible. It should be at least one size larger than suction inlet tapping and should have a minimum of elbows and fittings. If a long suction line is required, the pipe size should be increased to reduce friction losses. The suction piping should be laid out with a continual rise towards the pump, without any high spots, to prevent the formation of air pockets, which invariably cause troubles. Only eccentric reducers, installed straight side up should be between the suction piping and the pump suction flange.

Elbows and other fittings next to the pump suction should be selected and arranged carefully, or the flow into the impeller will be unfavourably disturbed. Long radius elbows are generally preferred for suction lines, as they create less friction and provide a more uniform flow distribution than standard elbows.

ATTENTION !

The suction pipe must be tight and free of air leaks or pump will not operate properly. After installation, the suction piping should be blanked off and hydrostatically tested for air leaks before the initial start-up.

5.4.2 Discharge Piping

Discharge piping should never be smaller than pump tapping and should preferably be one size larger. Generally, both a check valve and a gate valve are installed in the discharge line. The check valve is placed between the pump and the gate valve and protects the pump against reverse flow and water hammer in the event of unexpected driver failure. The gate valve is used when priming the pump or when shutting it down for inspection and repairs. Except on axial flow and mixed flow pumps, it is advisable to close the gate valve before stopping the pump. This is especially important when the pump is operated against a high static head.

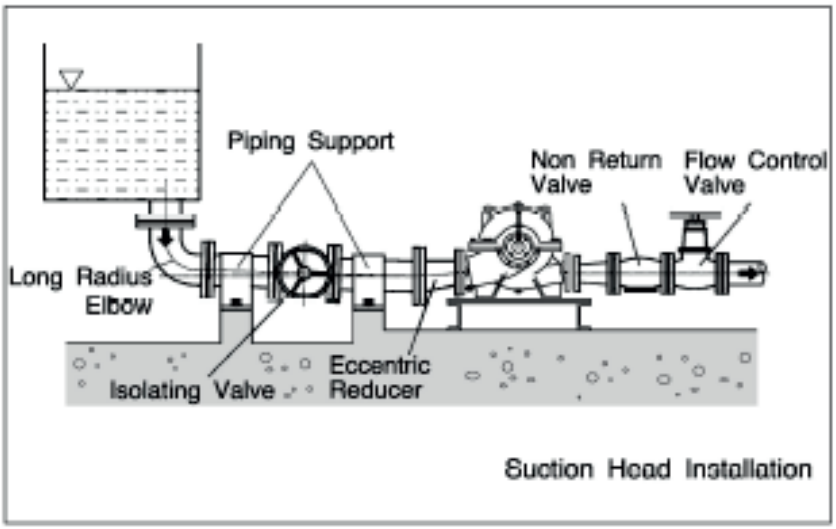
Piping Support
Non Return Valve
Flow Control Valve
Long Radius Elbow
Isolating Valve
Eccentric Reducer
Suction Head Installation

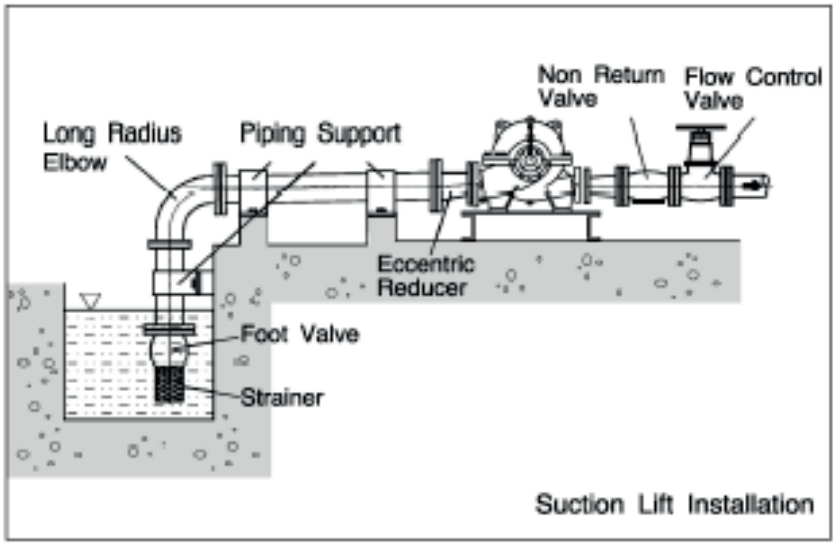
Non Return Valve
Flow Control Valve
Long Radius Elbow
Piping Support
Eccentric Reducer
Foot Valve
Strainer
Suction Lift Installation

Examples of Good and Bad Suction Layouts.

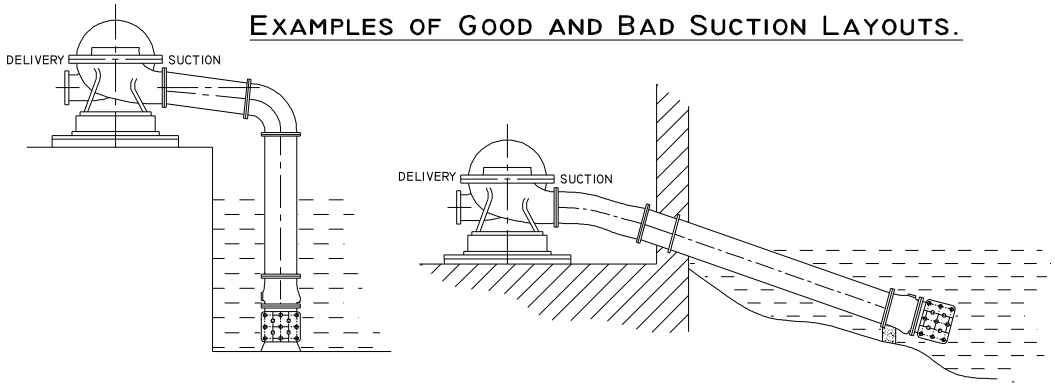

Good suction layouts, showing pipes rising all way to the pump.

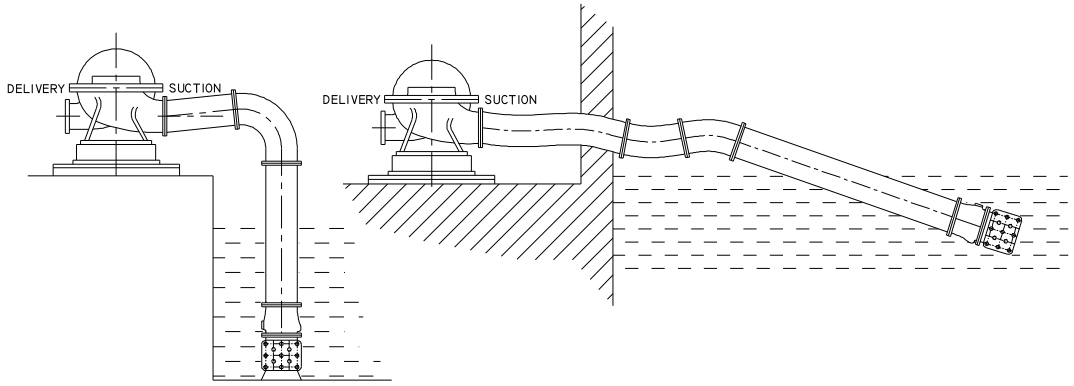

Bad suction layouts, which will cause air pockets and failure to pump.

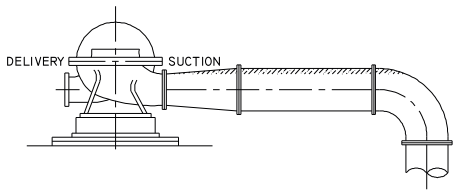

Showing how an air pocket may be formed when the suction pipe is bigger than the pump branch.

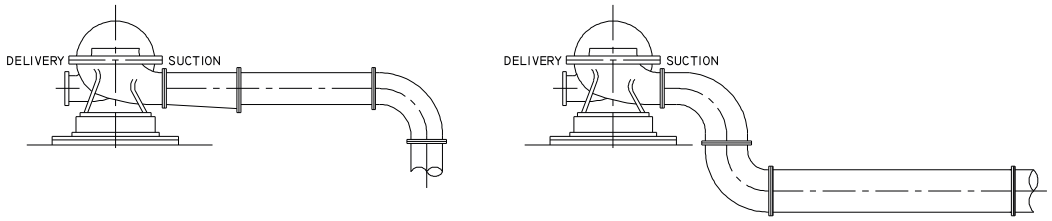

Showing how the fault in the illustration on the left may be avoided.

5.5 Electrical connection

Electrical connection should be made by a qualified electrician. Please follow the electrical equipments instructions carefully. General guidelines are as follows:

– The supply cable must be laid in such a way that it never touches the pipe work and/or the pump and motor casing.
– Check the mains current and voltage.
– **Please observe data on the motor rating plate.**
– Mains fuse: depends on nominal motor current.
– Observe earthing regulations.
– **Never install a pump without proper overload protection**

5.6 Instrumentation
A number of instruments are essential to maintain a close check on the performance and condition of the installed centrifugal pumps. A compound pressure gauge should be connected to the suction of the pump and a pressure gauge connected to the discharge. Pressure taps are provided in the suction and discharge branches for this purpose.

It is also advisable to provide a flow-metering device, as it is impractical to determine the capacity delivered by the pump with any degree of accuracy without one.

6 Operations and Maintenance

6.1 Priming
The pump must be primed before starting. Centrifugal pumps should almost never be started until they are fully primed, that is, until they have been filled with the liquid pumped and all the air has escaped. The pump casing and suction piping must be filled with liquid before starting since this damage some of the parts of the pump, which depend upon liquid for their lubrication. A hand pump or ejector can be used for priming when desired.

ATTENTION !

These pumps are not self-priming and if a pump fails to generate its rated pressure in starting, it must be stopped at once and re-primed.

All that is required to prime pumps with a positive inlet head is to open air cocks at the top of the pump casing and the inlet isolating valve. The liquid will then drive the air through the air cocks, which must be closed when priming is complete, and before the pump is started. It may be advisable to turn the rotating element of smaller by hand, so clearing air, which may be trapped in the pockets formed by curved impeller vanes.

There are two methods of priming pumps drawing from an elevation lower than the suction branch:

- By exhausting the air from the casing. To allow this method, the stuffing boxes must be sufficiently air tight, or they should be liquid sealed from some external supply. Some form of sight gauge is usually fitted to indicate when the casing is properly primed.
- If the suction pipe is fitted with a foot valve, the pump can be primed from some external supply under pressure; the pressure imposed on the pump must not be greater than that for which it is designed.

If the pump is to handle hot fluid, fill slowly to ensure the temperature is raised gradually. Depending on the fluid temperature and the system pressure, if the air cock is completely loosened hot liquid can escape or even shoot out at high pressure. Beware of scalding.

6.2 Final Check before Start-up

After a centrifugal pump has been properly installed and all necessary precautions have been taken in aligning with its driver, it is ready for service on its initial start. The following basic checks should be completed before the pump is started.

- Pump is fully primed
- Bearings filled with the correct amount and type of grease.
- Pump driver alignment is within tolerance.
- Motor direction of rotation is correct.
- Coupling guard is in place and bolted down.
- Pressure gauges mounted on both pump suction and discharge with correctly ranged pressure gauges fitted. Pressure gauges should not be installed at the bends in the piping, where their readings may be affected by the kinetic energy of the fluid.
- All blanks removed and the pump suction valve fully open.
- Pump discharge valve is fully closed.

6.3 Starting Procedures

Start the pump with the discharge valve closed. When the motor reaches its nominal running speed, check that the discharge pressure is normal and steady, without large fluctuations. Otherwise, stop the pump and repeat the priming procedure. If the problem persists, look for air leaks on the suction pipe and check the foot valve the fluid level. If the motor runs slow, check the connections. The starting procedure is as follows:

- Prime the pump, opening the suction valve and closing the drains to prepare the pump for operation.
- Start the motor.
- Open the discharge valve slowly.
- Observe the leakage from the stuffing boxes. If the packing is new, do not tighten up on the gland immediately, but let the packing run in before reducing the leakage through the stuffing boxes.
- Check the general mechanical operation of the pump.

ATTENTION ! Do not allow the pump to run for long periods with discharge valve tightly closed.

The pump should be shut down at once and the trouble should be corrected if the pump is running at its rated speed and found any of the following faults:

- Pump does not deliver any water
- Pump does not deliver enough water
- Flow is getting down
- Discharge pressure is not enough
- Driver overloaded
- Vibration on pump
- High noise level
- Bearing overheating

6.4 Stopping Procedure

The stopping procedure is as follows:

- Close the discharge valve.
- If a non-return device is built into the discharge pipe, the valve can remain open provided there is a back pressure.

When switching off the pump the valve on the inlet pipe must not be closed.

- Stop the driver.
- If the pump is out of operation for long periods the valve on the inlet pipe is to be closed

- If the pump is out of operation for long periods and/or there is a risk of freezing, the pump is to be drained or protected against freezing.

6.5 Operation

ATTENTION ! The pump should always run quietly and free from vibrations and not be operated at temperatures higher than those given in the catalogue/data specification sheet.

The pump can be switched on and off in different ways, depending on the operating conditions and the degree of automation in system. The following is to be observed:

Start Procedure

- Ensure that the pump is completely full
- Ensure a continuous flow to the pump with a sufficiently large NPSH value.
- Avoid an overly weak back-pressure causing overload.
- To avoid an excessive temperature rise in motor and excessive strain on pump, coupling, motor and bearings, the set should not be turned on more than 10 times/hour.

Stop Procedure

- Avoid reverse operation of the pump
- Do not work for too long with overly small transport (volume of flow) capacities.

6.6 General Rules on Pump Operation

6.6.1 Running a pump dry:

Only a centrifugal pump with excessive clearances between stationary and rotating parts could run dry for an indefinite period of time. Most centrifugal pumps have close clearance leakage joints and cannot run dry at all, or in some cases for longer than a few seconds, without being seriously damaged.

6.6.2 Throttling at the pump suction:

Throttling the suction of a centrifugal pump causes a reduction of the absolute pressure at the inlet to the impeller. This can be made to result in a reduction of capacity by forcing the pump to operate “in the break”, and reducing the delivered capacity by altering the shape of the head-capacity curve. Such operation is harmful to the pump. Pump efficiency is reduced when operated “in the break”, but most important, erosion and premature destruction is caused by cavitation induced when the suction is throttled.

Pump capacity can be reduced simply and safely by throttling the discharge. In this manner, artificial friction losses are induced by throttling, and a new system-head curve is obtained, which intersects the head-capacity curve at the desired flow.

Throttling at the suction is permissible only when the suction pressure exceeds the minimum requirements by a large margin, such as the case of the second pump in series unit. The effect, however, is not to reduce capacity by operation in the break, but rather by the reduction of the total net head generated by the series unit. This causes the head-capacity characteristics and the system-head curve to intersect at a lower rate of flow.

6.6.3 Restarting motor-driven pumps stopped by power failure:

If a check valve protects a pump against reverse flow after a power failure, there is generally no reason why the pump should not be restarted once current has been re-established. The type of motor control used will determine whether or not the pump will start again automatically once the power is restored. Starters are made with low-voltage protection, with low-voltage release, or without either. Starters with low-voltage protection will de-energise under low-voltage conditions, or following power failure, and the units they control must be restarted manually. Starters with low-voltage protection can only be used with momentary contact pilot devices and cannot be used with maintained-contact pilot devices, such as float switches, unless auxiliary relays are incorporated in the controls.

If the starter does not incorporate low-voltage protection, resumption of power will always cause the unit to start again automatically. Because pumps operating on a suction lift may lose their prime during the period when power is off, starters should be provided with low-load protection for such installations. This does not

apply, of course, if the pumps are automatically primed, or if some protection device is incorporated so that the pump cannot run unless it is primed.

6.7 Checks to be made while pump is running

- The pump must run smoothly, quietly and free from vibration at all times.
- The pump must never run dry.
- Never run the pump for a long period against a closed discharge valve.
- The bearing temperature may exceed the ambient temperature by up to 50^0C. But must never rise above 80^0C.
- The valves in the auxiliary lines must remain open while the pump is running.
- If the pump has soft packing type stuffing boxes, these should drip during operation. The gland nuts should only be slightly tightened. In case of excessive leakage from the stuffing box, tighten the gland nuts slowly and evenly until the leakage is reduced to the dripping state. Check the stuffing box for overheating by hand. If the gland nuts can not be tightened any further, remove the old packing rings and clean the packing chamber, insert the new packing rings. Make sure that each packing ring is cut at correct size. The joint in successive rings should offset to each other by 90^0.
- If the pump has a mechanical seal, it will experience only minor or no visible leakage during operation. If there is considerable leakage from the seal, that means the seal surfaces are worn out and it needs to be replaced. The life of the mechanical seal highly depends on the purity of the water.
- The flexible coupling elements should be regularly checked and replaced as soon as they show signs of wear.
- Stand-By pumps should be run for a short time at least once a week to ensure they are in constant readiness for operation. Check the integrity of auxiliary connections.

7 Maintenance

7.1 General information

– The operator is responsible for ensuring that inspection and assembly are carried out by authorised and qualified personnel who have studied the operating instructions closely.
– By drawing up a maintenance plan, costly repairs can be avoided with a minimum of maintenance expense and a fault-free pump operation obtained.

Before carrying out any maintenance work, switch off the pump and ensure that it cannot be switched on again by unauthorised people. Never carry out work on a running pump.

Depending on the operating condition of the pump and/or installation (fluid temperature) the entire pump can become very hot.
Avoid touching the pump owing to the risk of burning.

7.2 Daily Observation

Pump installations that are constantly attended should be inspected hourly and daily. A card record system is unnecessary for these inspections, but the operator should immediately report any irregularity in pump operation. A change in the sound of a running pump should be investigated immediately. Bearing temperatures should be observed hourly. An abrupt change in bearing temperature is much more indication of trouble than a constant high temperature.
Stuffing box operation should also be observed hourly. The stuffing box leakage should be checked to see whether it is sufficient to provide cooling and lubrication of the packing but not excessive and wasteful.

The pressure gauges and flow indicator, if these are installed, should also be checked hourly for proper operation. Recording instruments, if available, should be checked daily to ensure that the capacity output, pressure, or power consumption do not indicate that something needs attention.

7.3 Semi-annual Inspection
The stuffing box gland should be checked semi-annually for free movement. The gland bolts and nuts should be cleaned and oiled and inspected to see if the packing needs replacement.

The pump and driver alignment should be checked and corrected if necessary. Bearings should be checked to see if the correct amount of grease is provided and it is still of suitable consistency.

7.4 Annual Inspection
Centrifugal pumps should be very thoroughly inspected once a year. In addition to the semi-annual maintenance procedure, the bearings should be removed, cleaned and examined for flaws. The bearing housings should be carefully cleaned. Bearings should be examined for scratches and wear after cleaning. Immediately after inspection, bearings should be coated with oil or grease to prevent dirt or moisture from getting into them.

The packing should be removed and the shaft sleeves should be examined for wear. The coupling halves should be disconnected and alignment checked. Drains, sealing water piping, and other piping should be checked and flushed.

The pump stuffing boxes should be repacked and the coupling reconnected.

If instrument and metering devices are available, these should be recalibrated and a test made to determine whether proper performance is obtained. If internal repairs are made, the pump should again be tested after completion of the repairs.

7.5 Complete Overhaul
General rules cannot easily be made to determine the proper frequency and regularity of complete overhauls of centrifugal pumps. The type of service for which the pump is intended, the general construction of the pump, the liquid handled, the materials used, the average operating of the pump, and the evaluation of overhaul costs against possible power savings from renewed clearances, all enter into the decision on the frequency of complete overhauls. Some pumps on severe service may need a complete overhaul monthly, where as other applications only require overhaul every two to four years or even less frequently.

7.6 General Maintenance - Wear Rings
Wearing rings are fitted in the casing (casing wearing rings) and frequently on the impeller wearing rings). These wearing rings provide a close running clearance, to reduce the quantity of liquid leaking from the high-pressure side to the suction side. These rings depend on the liquid in the pump for lubrication. They will eventually wear so that the clearance becomes greater and more liquid passes into the suction. This rate of wear depends on the character of the liquid pumped. Figure below gives the nominal clearances between the wear rings. These clearances are good for dissimilar metals, which have a low tendency to gall. However wear rings, which are of the same material, must have more clearance than is recommended in figure below.

• Nominal Wear Ring Internal Diameter (mm)	Nominal Diametrical Clearance (mm)
50	0.26
100	0.42
150	0.46
200	0.52
250	0.56
300	0.60
350	0.66
400	0.70
450	0.75
500	0.85

Note: Above clearances are for wear ring/impeller combinations of dissimilar metals.

7.7 Shaft Seals

Pump with mechanical seal:

- The mechanical seal is mounted directly on the shaft. No adjustment is required after its assembly.
- The life of the mechanical seal is strictly dependent on the particles in the liquid, operating temperatures and dry running. Under standard operating conditions, the life of mechanical seal is about 10,000 operating hours.
- When operating properly the mechanical seal has no visible leaks.
- The mechanical seal is maintenance free; its tightness is to be checked regularly.
- The slightest leak is a sign of the start of tightness problem caused by damage to the sliding surfaces, sealing rings, bellows, diaphragm or other components of the mechanical seal.

Pump with gland:

- A properly run-in and well-adjusted gland requires very little maintenance. If over time the leak becomes too big, the gland must be re-tightened.
- If the gland is tightened too far and can not be re-tightened, it must be re-packed. It is recommended that the gland packing be replaced after two years' operation.
- Before packing the glands, the packing space and the shaft sleeve must be thoroughly cleaned.
- Place the first ring around the shaft and insert into the packing space. Offset each subsequent packing ring joint by 90^0 compared to the previous packing ring joint and insert into packing space individually.
- Bring gland forward and tighten nut by hand. After assembly the shaft must be able to easily turned by hand.
- The gland packing must drip slightly during operation.

8 Dismantling / Reassembly

Most pump designers and specialists consider that a centrifugal pump need not be opened for inspection unless either factual or circumstantial evidence indicates that overhaul is necessary.
The following rules must be followed when dismantling the pump:

- Disassembly and re-assembly must be done by skilled personnel.
- List the order of the dismantling of the parts.
- Parts with pressure-tight faces must be handled with the greatest care.
- If it is difficult to remove parts from the shaft, employ the usual penetrating oils or releasing fluids. If this is not enough, heat the jammed parts, beginning at the outside to prevent overheating the shaft more than necessary.
- Repeat the operation several times if necessary, but never use enough force to risk distorting the shaft and never use a hammer or other impact tools.
- The gasket between the pump casing and cover must be replaced paying strict attention to the thickness of the original one.
- The reassembly of the pump is carried out in the reverse order of the disassembly.
- Pay attention when fixing the screws for casing/cover and cover/bearing housing.

8.1 Dismantling

ATTENTION ! **Before starting work on the pump set, make sure it is disconnected from the mains and can not be switched on accidentally.**

Centrifugal pumps should be dismantled with great care. These pumps can be dismantled without disturbing the suction and discharge piping. The following procedure should be followed for dismantling of the pumps:

- Close all valves in the suction and discharge lines and drain the pump by opening the drain plug and the air vent screw.
- Disconnect the stuffing boxes flushing pipes.
- Remove coupling guard and other safety guard.
- Remove the coupling bolts and nuts.
- Unscrew and remove glands. These are split across the centreline and the relationship of each half to the other is maintained with pegs or set screws. After splitting the glands the two halves can be taken away completely.
- Remove the top clamp of the bearing bracket assembly.
- Unscrew and remove all the splitting flange bolts and remove the two parallel dowel pins. The upper half casing then can be lifted away straight up to prevent damage to internal parts.
- Pull out the rotating assembly fitted with impeller, bearing housing and to be carried to a safe working place. This assembly should be removed vertically to prevent damage to the impellers, wear rings and other parts.
- Release coupling pins and bushes from half coupling.
- Unscrew and remove the bearing housing covers from both ends.
- Remove the bearing housing from the rotating assembly.
- Remove the shaft lock nut and washer and pull out bearings.
- Remove the water throwers.
- Remove the casing wear rings.
- Gland packing can be removed from the sleeve together with the logging rings.
- Unscrew the shaft sleeves from the shaft and care should be taken that the sleeves are threaded in different hands – one is of R.H. and the other of L.H. marked on it.
- Now impeller is free to be removed. The impeller is press fit on the shaft and drawing tackle is recommended.
- Clean all parts, replace damaged or worn out ones.

During dismantling, the various parts removed must be marked to ensure proper reassembly.

8.2 Rotating Element Reassembly

The dismantling procedure should be carried out in reversed sequence for reassembly of the pump. The following care should be taken before reassembly:

- Clean the bearing housings and pump casing properly.
- Replace stuffing box packing.
- Clean the bearings and fill them with the correct amount and type of grease. In case of large axial and radial clearance, replace the bearings.
- Inspect the casing wear ring and impeller neck diameter. If the diametric clearance exceeds 1 mm, replace the wear rings or both.
- All gaskets should be replaced.
- Inspect the shaft sleeves. If there is any major wear, replace them.
- Impellers must be remounted on the pump shaft so that they will rotate in the proper direction, always away from the curvature of their vanes.
- The assembled rotating element should be placed in the lower half of the casing and the total lateral clearance checked. When the thrust bearing is assembled and the shaft is in its proper position, this total clearance should be suitably divided and the impellers centrally located in the casing.
- To avoid shaft distortion, all abutting joints must be square with the shaft axis and with each other, and the impeller and sleeves must not be tightened with excessive force. This will cause crushing of metal at these joints, exerting severe moments on the shaft. The shaft may become bowed under the influence of these moments and develop a marked vibration, in addition to the possibility of rubbing and binding at the internal running joints.
- If possible after assembly, the rotating assembly should be supported in its bearings or on centres to check for concentricity and any eccentricity corrected.

ATTENTION ! Never use the old gaskets, make sure the new gaskets and O-rings are the same size as

the old ones.

8.3 Pump Reassembly

Great care must be exercised in replacing the upper half of the casing and tightening up the casing bolts. The casing bolts must be tightened precisely according to the order of tightening as indicated in numbers as shown in figure. After all the bolts have been tightened once, they should be tightened again to ensure the tightness of the casing joint. They must be tightened once more when the pump has been brought up to operating temperature. Tightening torques for bolts and screws are given in appendix:

As soon as all work is finished, all scheduled safety and protective devices must be properly fitted and put into operation.

Exploded view with mechanical seal execution (Single Stage)

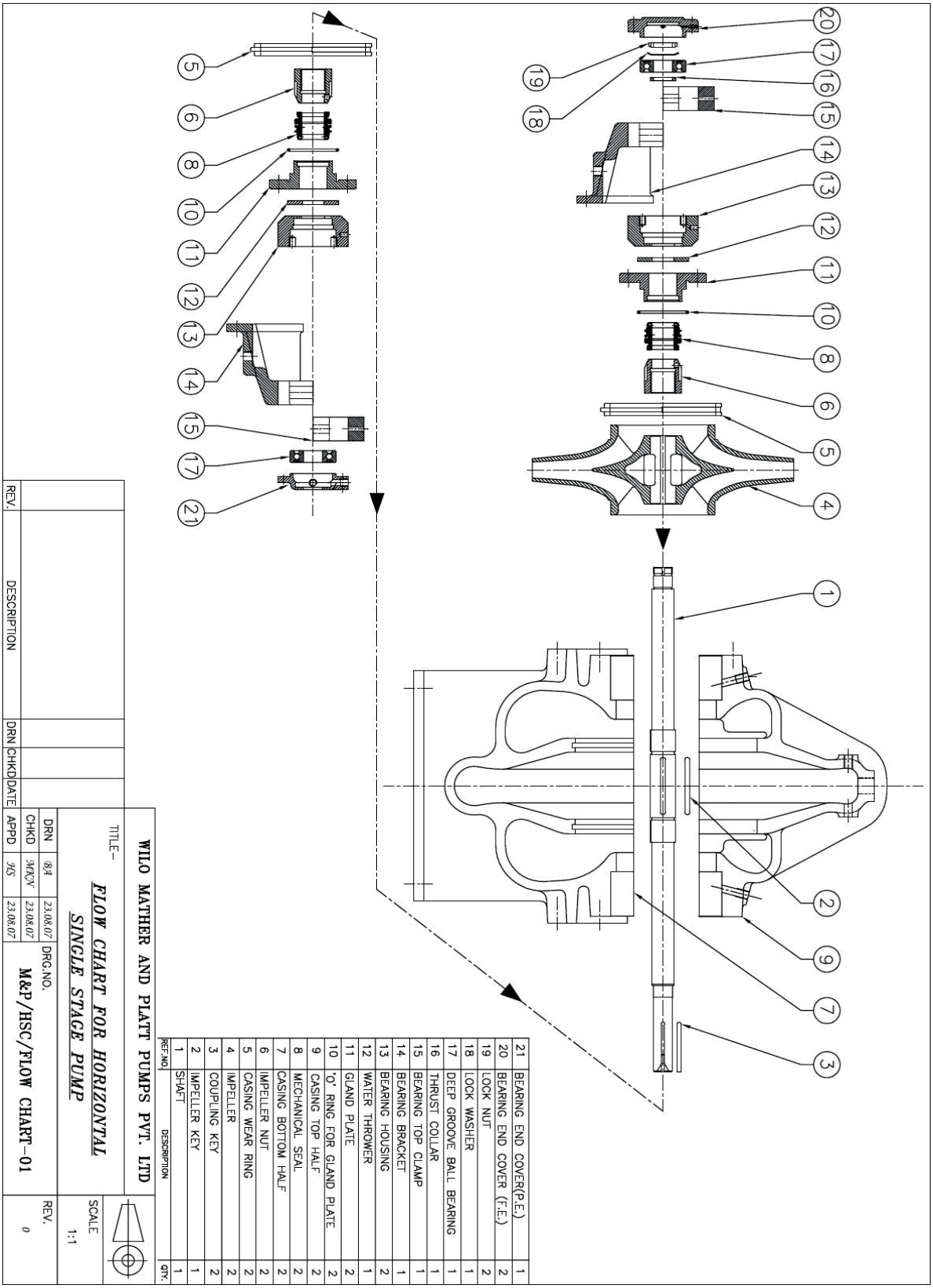

Exploded view with packed gland execution (Single Stage)

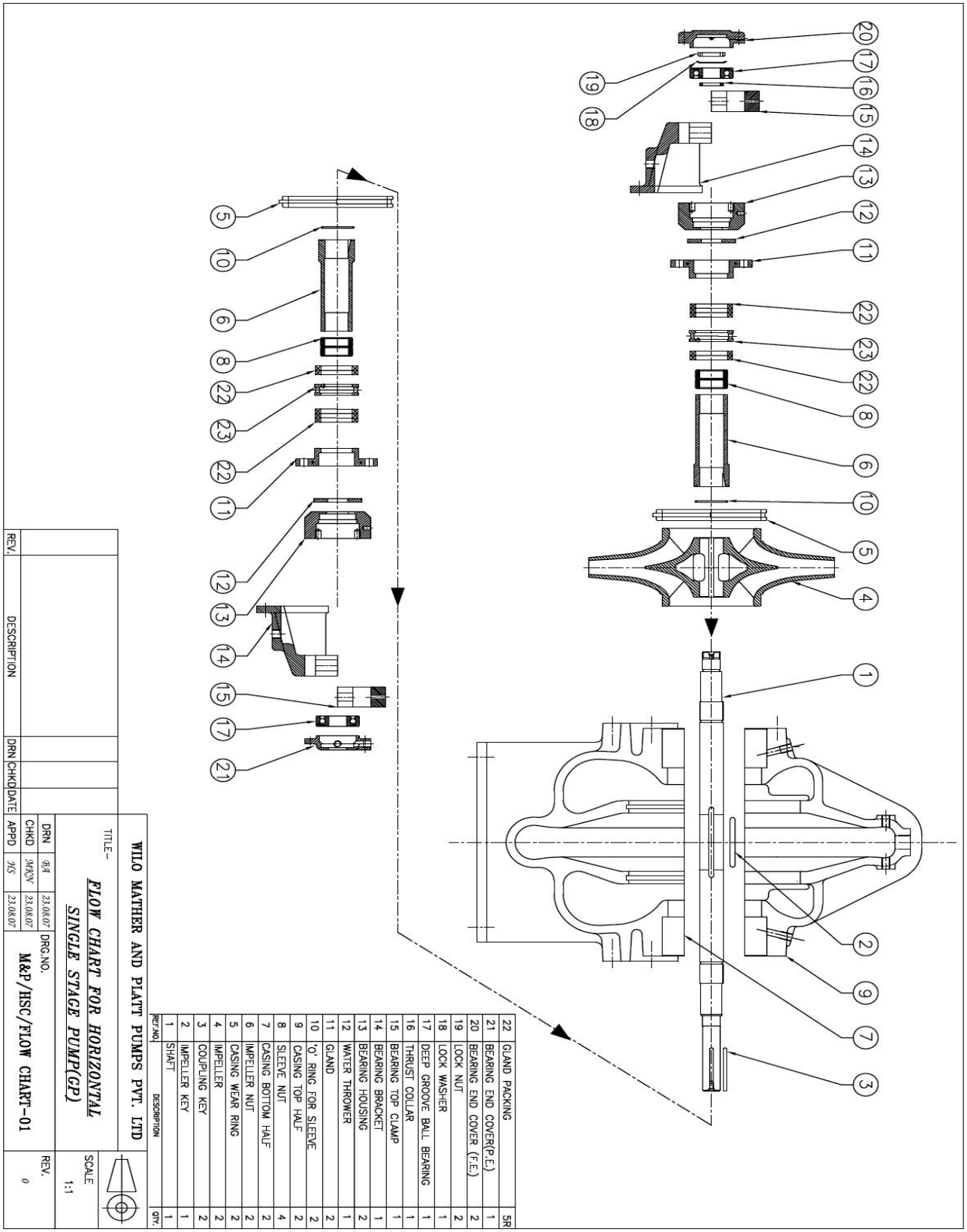

REF.NO.	DESCRIPTION	QTY.
22	GLAND PACKING	5R
21	BEARING END COVER(P.E.)	1
20	BEARING END COVER (F.E.)	2
19	LOCK NUT	2
18	LOCK WASHER	1
17	DEEP GROOVE BALL BEARING	1
16	THRUST COLLAR	1
15	BEARING TOP CLAMP	1
14	BEARING BRACKET	1
13	BEARING HOUSING	2
12	WATER THROWER	1
11	GLAND	2
10	'O' RING FOR SLEEVE	2
9	CASING TOP HALF	2
8	SLEEVE NUT	4
7	CASING BOTTOM HALF	2
6	IMPELLER NUT	2
5	CASING WEAR RING	2
4	IMPELLER	2
3	COUPLING KEY	2
2	IMPELLER KEY	1
1	SHAFT	1

WILO MATHER AND PLATT PUMPS PVT. LTD

TITLE–

FLOW CHART FOR HORIZONTAL SINGLE STAGE PUMP(GP)

SCALE 1:1

DRG.NO. M&P/HSC/FLOW CHART-01

REV. 0

REV.	DESCRIPTION	DRN	CHKD	DATE

DRN	BJA	23.08.07
CHKD	SMKSN	23.08.07
APPD	RKS	23.08.07

Exploded view with mechanical seal execution (Double Stage)

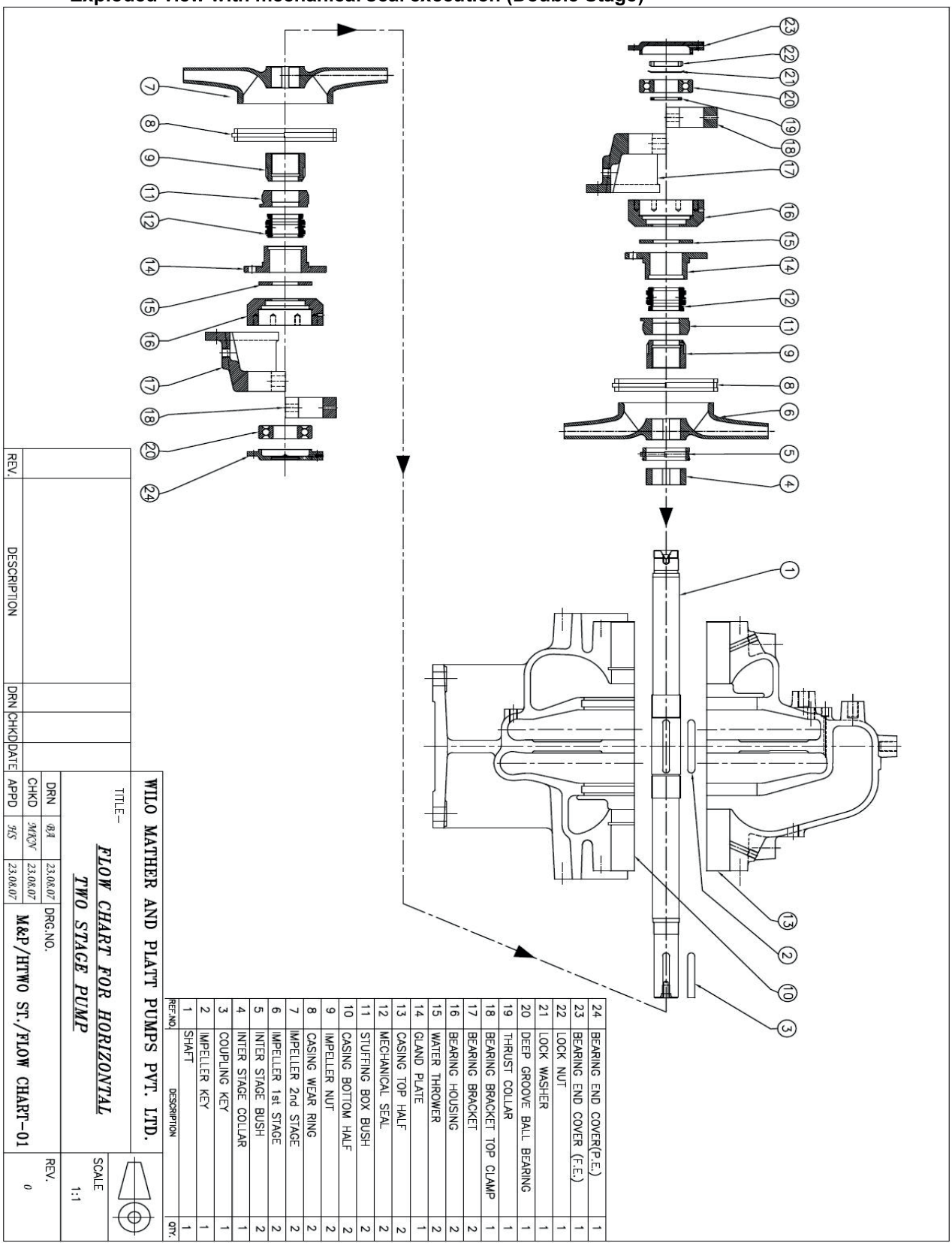

REF.NO.	DESCRIPTION	QTY.
1	SHAFT	1
2	IMPELLER KEY	1
3	COUPLING KEY	1
4	INTER STAGE COLLAR	1
5	INTER STAGE BUSH	2
6	IMPELLER 1st STAGE	2
7	IMPELLER 2nd STAGE	2
8	CASING WEAR RING	2
9	IMPELLER NUT	2
10	CASING BOTTOM HALF	2
11	STUFFING BOX BUSH	2
12	MECHANICAL SEAL	2
13	CASING TOP HALF	2
14	GLAND PLATE	1
15	WATER THROWER	2
16	BEARING HOUSING	2
17	BEARING BRACKET	2
18	BEARING BRACKET TOP CLAMP	1
19	THRUST COLLAR	1
20	DEEP GROOVE BALL BEARING	1
21	LOCK WASHER	1
22	LOCK NUT	1
23	BEARING END COVER (F.E.)	1
24	BEARING END COVER(P.E.)	1

WILO MATHER AND PLATT PUMPS PVT. LTD.

TITLE—

FLOW CHART FOR HORIZONTAL TWO STAGE PUMP

DRN		23.08.07
CHKD		23.08.07
APPD		23.08.07

DRG.NO. M&P/HTWO ST./FLOW CHART-01

SCALE 1:1

REV. 0

REV.	DESCRIPTION	DRN	CHKD	DATE

Exploded view with mechanical seal execution (Through Bore)

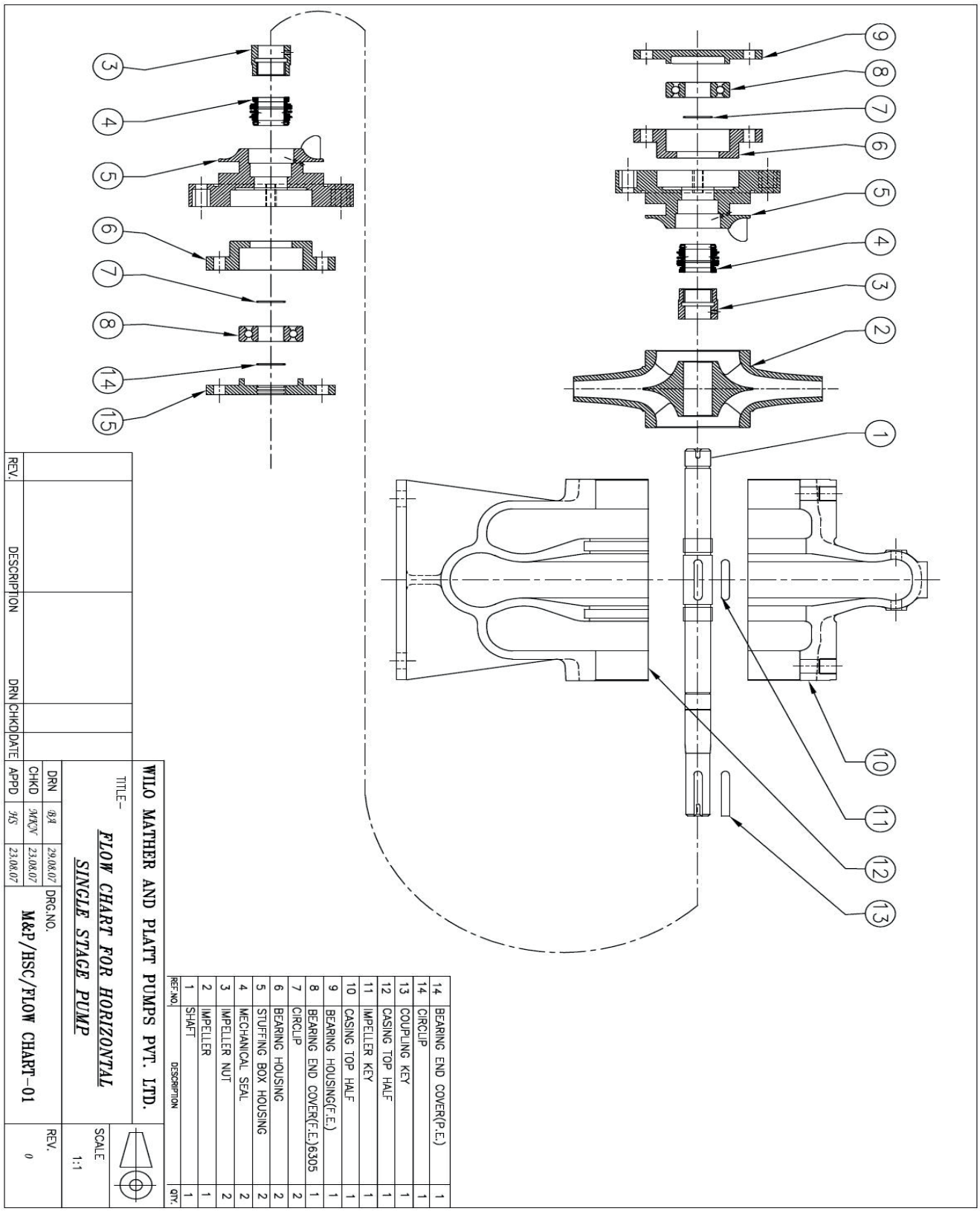

8.4 Recommended Lubricants

Greases

Manufacturer	Grease Type
1. Atlantic Refining Co.	Atlantic Lubricant 54
2. Cities Service Oil Co.	Trojan Grease H-2
3. Continental Oil Co.	Conoco Super Lube
4. Gulf Oil Corp.	Gulf Supreme Grease No.2
5. Mobile Oil Co.	Mobilux Grease No.2
6. Pennzoil Co.	Pennzoil 705 HDW
7. Phillips Petroleum Co.	Philube Multi-Purpose L-2
8. Quaker State Oil Refining Corp.	Quaker State Multi-Purpose Lubricant
9. Shell Oil Co. Inc.	Shell Alvania Grease 2
10. Sinclair Refining Co.	Litholine MP Grease
11. Standard Oil Co. Of California.	Chevron Industrial Grease Med.
12. Sun Oil Co.	Sun72 XMP Grease or Prestige 42
13. Texaco, Inc.	Texaco Novatex Grease No.2

NOTE: Do not mix greases while the pump is in operation. Should it be necessary to change make of grease used, bearings and housings should be cleaned with kerosene and completely re-packed with new grease.

Oils

Manufacturer	Oil Type
1. American Oil Co.	American Industrial Oil No.15
2. Atlantic Refining Co.	Atlantic Hytherm Oil – C
3. Cities Service Oil Co.	Pacemaker Oil No.1
4. Continental Oil Co.	Conoco Dectol 15 R & O
5. Gulf Oil Corporation	Gulf Harmony 44
6. Mobile Oil Co.	Mobil DTE Oil Light
7. Pennzoil Co.	Pennbell SFI 8
8. Phillips Petroleum Co.	Magnus Oil, Grade Light
9. Quaker State Oil Refining Corp.	Quaker State Motor Oil SAE 10W
10.Richfield Oil Corporation	Eagle Oil R & O, No.10
11.Shell Oil Co., Inc.	Shell Tellus Oil Grade 27
12.Texaco , Inc.	Texaco Regal Oil A (R&O)

9 Pump Sealing

9.1 Stuffing Box Packing:

Stuffing box packing troubles are one of the commonest causes of centrifugal pump failure. The conditions that contribute to stuffing box difficulties are:

a) Shaft running off centre because of excessive wear in the bearings, a bent shaft, or misalignment. This condition can be readily checked – first by disconnecting the coupling and rechecking the alignment, and secondly by mounting an indicator on the pump casing in the vicinity of the stuffing box to determine whether the shaft revolves concentrically.

b) Shaft or shaft sleeves worn and scored at the packing. A routine examination of these parts will reveal whether they must be renewed or repaired.

c) Shaft vibration due to unbalance in the rotor, cavitation, operation at extremely light flows or beyond the recommended maximum capacity, or instability in parallel operation.

d) Plugging of the water seal connection or improper location of the seal so that no sealing liquid can enter the stuffing box. The presence of dirt or grit in the sealing liquid will similarly cause stuffing box difficulties by scoring the shaft or shaft sleeves.

e) Excessive tightening of the gland with resulting absence of the leakage that lubricates the packing. Hourly and daily observation of the pump operation, together with the knowledge that some leakage is necessary for proper stuffing box operation, will prevent troubles from this cause.

f) Failure to provide suitable cooling through water-cooled stuffing boxes if the pump is so fitted.

g) Excessive clearance between the bottom of the stuffing box and the shaft or shaft sleeve, which causes the packing to be gradually pushed into the pump interior. This condition can arise when the shaft or shaft sleeves are repaired by grinding them down excessively instead of replacing them or building them up to original dimensions.

h) Packing not properly selected for pressure, temperature, or rubbing speed conditions.

i) Packing not properly inserted into the stuffing box because the individual rings are too short and the gap between ring ends is excessive, or because the ring joints are not staggered.

9.2 Installing Soft Packing:

j) Loosen and remove the gland from the stuffing box.

k) Using a packing puller, begin to remove the old packing rings.

l) Remove the split lantern ring and then continue removing packing with the puller.

m) After the packing has been removed, check the sleeve for scoring and nicks. If the shaft sleeve or shaft cannot be cleaned up, it must be replaced. For the size of packing please refer to the pump data sheets.

n) Wrap the packing tightly around a mandrel, which should be the same size as the pump shaft or sleeve. The number of coils should be sufficient to fill the stuffing box. Cut the packing along one side to form individual rings.

o) Assemble the split packing rings on the pump. Each ring should be seated individually, with the split ends staggered 90^0 and the gland tightened to seat and fully compressed the ring. Be sure the lantern ring is reinstalled correctly at the flush connection. Then back off the gland and retighten only finger-tight.

p) Allow excess leakage during break-in to avoid the possibility of rapid expansion of the packing, which could score the shaft sleeve or shaft so that leakage could not be controlled.

q) Leakage should be generous upon start-up. If the packing begins to overheat at start-up, stop the pump and loosen the packing until leakage is obtained. Restart only if the packing is leaking.

Leakage to Prevent Burning and Sleeve Scoring:

Pressure, lb/in^2 (kPa)	Leakage, drops/min	(cc/min)
0-60 (0-400)	60	4
61-100 (401-700)		190
101-250 (701-1700)		470

9.3 Dimensions for Gland Packing

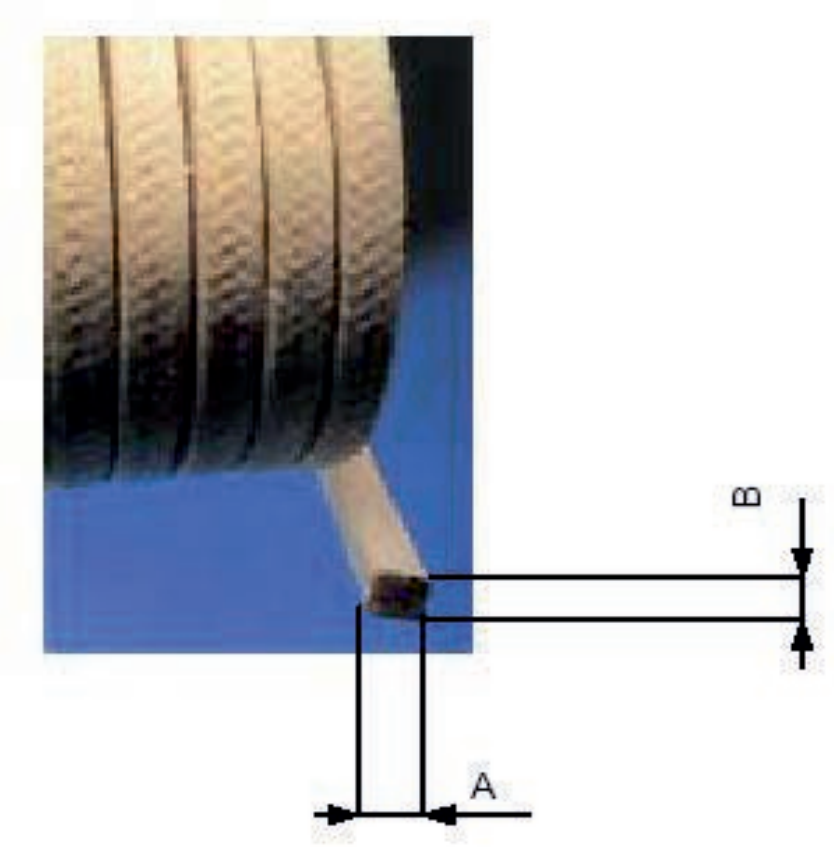

SHAFT GROUP	A	B
1	10	10
2	10	10
3	16	16
4	16	16
5	20	20
6	20	20
7	20	20

9.4 Mechanical Seals

Pumps handling hazardous or expensive liquids, or liquids where the necessary leakage from a packed gland is unacceptable, are often furnished with mechanical seals.
Mechanical seals are made in a wide variety of designs to suit particular applications, The manufacturer's instructions for fitting or replacing the specific seal type used must, therefore, be followed exactly. A mechanical seal is a precision device and must be treated accordingly.

When the pump is equipped with mechanical seal, no attention or adjustment to the seal is normally required. Except for possible slight initial leakage, the seal should operate with negligible attention.

9.5 Sealing Problems, Causes and Solutions:

Problems	Causes	Solutions
No liquid delivered by pump	Lack of prime (packing loose or defective, allowing air to leak into suction)	Tighten or replace packing and prime pump.
Not enough liquid delivered by pump	Air leaking into the stuffing box Defective packing	Check for leakage through stuffing box while operating – if no leakage after reasonable gland adjustment, new packing may be needed. Lantern ring may be clogged or displaced and may need centering in line with sealing liquid connection. Sealing liquid line may be clogged. Shaft or shaft sleeve below packing may be badly scored, allowing air to be sucked into pump. Replace packing and check smoothness of shaft or shaft sleeve.
Not enough pump pressure	Defective packing	As for preceding.
Pump works for while and quits	Air leaks into stuffing box	As for preceding.
Pump takes too much power	Packing too tight	Release gland pressure and retighten reasonably. Keep leakage flowing – if none, check packing, sleeve, or shaft.
Pump leaks excessively at stuffing	Defective packing	Replace worn packing. Replace packing damaged by lack of lubrication.
Trouble	Cause	Cure
	Wrong type of packing Shaft or shaft sleeve scored	Replace packing not properly installed or run in. Replace improper packing with correct grade for liquid being handled. Put in lathe and machine-true and smooth or replace.
Stuffing box overheats	Packing too tight Packing not lubricated Wrong grade of packing Insufficient cooling water to jackets Stuffing box improperly packed	Release gland pressure. Release gland pressure and replace all packing if any burnt or damaged. Check with pump or packing manufacturer for correct grade. Check for open supply line valves or clogged line. Repack.
Packing wears too fast	Shaft or shaft sleeve worn or scored Insufficient or no lubrication Packing packed improperly Wrong grade of packing Pulsating pressure on external seal liquid line	Remachine or replace. Repack, making sure packing loose enough to allow some leakage. Repack properly, making sure all old packing removed and box clean. Check with pump or packing manufacturer. Remove cause of pulsation.

9 Locating Troubles:

Symptom/Troubles	Possible Causes	Key
Pump does not deliver water	1,2,3,4,6,11,14,16, 17,22,23	1. Pump not primed 2. Pump or suction pipe not completely filled with liquid 3. Suction lift too high 4. Insufficient margin between suction pressure and vapour pressure 5. Excessive amount of air or gas in liquid 6. Air pocket in suction line 7. Air leakage in suction line 8. Air leakage into pump through stuffing boxes 9. Foot valve too small 10. Foot valve partially clogged 11. Inlet of suction pipe insufficiently submerged 12. Water seal pipe plugged 13. Seal cage improperly located in stuffing box, preventing sealing fluid entering space to form the seal 14. Speed too low 15. Speed too high 16. Wrong direction of rotation 17. Total head of system higher than pump design head 18. Total head of system lower than pump design head 19. Specific gravity of liquid different than design 20. Viscosity of liquid differs from that for which designed 21. Operation at very low capacity 22. Parallel operation of pumps unsuitable for such operation 23. Foreign matter in impeller 24. Misalignment 25. Foundations not rigid 26. Shaft bent 27. Rotating part rubbing on stationary part 28. Bearings worn 29. Wearing rings worn 30. Impeller damaged 31. Casing gasket defective, permitting internal leakage 32. Shaft or shaft sleeves worn or scored at the packing 33. Packing improperly installed 34. Incorrect type of packing for operating conditions 35. Shaft running off-centre due to worn bearing or misalignment 36. Rotor out of balance resulting in vibration 37. Gland too tight, resulting in no flow of liquid to lubricate packing 38. Failure to provide cooling liquid to water cooled stuffing box 39. Excessive clearance at bottom of stuffing box between shaft and casing, causing packing to be forced into pump interior 40. Dirt or grit in sealing liquid, leading to scoring of shaft or shaft sleeves 41. Excessive thrust caused by a mechanical failure inside the pump or by failure of the hydraulic balancing device, if any 42. Excessive amount of grease or oil in the housing of an anti-friction bearing or lack of cooling, causing excessive bearing temperature 43. Lack of lubrication 44. Improper installation of antifriction bearings 45. Dirt getting into bearings 46. Rusting of bearings due to water getting into bushing 47. Excessive cooling of water-cooled bearing resulting in condensation in the bearing housing of moisture from atmosphere
Insufficient capacity delivered	2,3,4,5,6,7,8,9,10, 11,14,17,20,22,23, 29,30,31	
Insufficient pressure developed	5,14,16,17,20,22,2 9,30,31	
Pump loses prime after starting		
Pump requires excessive power		
Stuffing box leaks excessively		
Packing has short life		
Pump vibrates or is noisy		
Bearings have short life		
Pump overheats and sizes N.B: 1-13- Suction troubles 14-22- System trouble 23-47- Mechanical troubles		

10 Spare Parts

The minimum stock of spare parts for any centrifugal pump should include the following:
For Gland Packing Unit

i. set of wear rings,
ii. set of shaft sleeves
iii. set of gland packing
iv. set of bearings
v. lantern ring
vi. gland
vii. split flange gaskets

For Mechanical Seal Unit

i. set of wear rings,
ii. set of mechanical seal
iii. set of bearing
iv. split flange gasket

It is often advisable to carry a complete spare rotating assembly for installation in the pump when examination shows that the pump rotating assembly has become excessively worn, or if it becomes accidentally damaged. Sufficient stock of spare gland packing for the stuffing boxes and split flange gasket should always be in stock.

For ordering spare parts please provide the pump model and pump serial number as stamped on the nameplate.

Recommended stock of spare parts:

Part	Qty/ Pump	No. of pumps (including stand by pumps)						
		2	3	4	5	6	8	10 and more
		No. of SPARE parts						
BEARING END COVER (PE)	1	1	1	2	2	2	2	20%
BEARING END COVER (FE)	1	1	1	2	2	2	2	20%
LOCKING WASHER	1	1	1	2	2	3	4	50%
LOCK NUT	1	1	1	2	2	3	4	50%
SET OF BEARINGS	2	2	2	4	4	6	6	50%
WATER THROWER	2	2	2	4	4	6	6	30%
IMPELLER NUT	2	2	2	4	4	6	6	30%
THRUST COLLAR	1	1	1	2	2	2	3	30%
SHAFT	1	1	1	2	2	2	3	30%
MECHANICAL SEAL	2	Refer works						
COUPLING KEY	1	1	1	2	2	2	3	30%
IMPELLER KEY	1	1	1	2	2	2	3	30%
SHAFT SLEEVE & NUT (SET)	2	2	2	2	4	4	4	30%
GLAND PACKING (SET)	2	4	4	4	6	6	8	50%
GLAND & LOGGING RING (SET)	2	2	2	4	4	4	6	30%
NECK RING	2	2	2	4	4	6	6	50%
IMPELLER (2 NOS. FOR 2 STAGE)	1	1	1	2	2	2	3	30%
CASING	1	1	1	1	2	2	2	20%
GASKET AND O RING (SET)	1	4	6	8	8	9	12	150%
GLAND PLATE	2	2	2	2	2	4	4	20%
BEARING BRACKET & HOUSING	2	2	2	2	2	4	4	20%

11 Sectional Drawing

ASP Single Stage With Mechanical Seal Execution

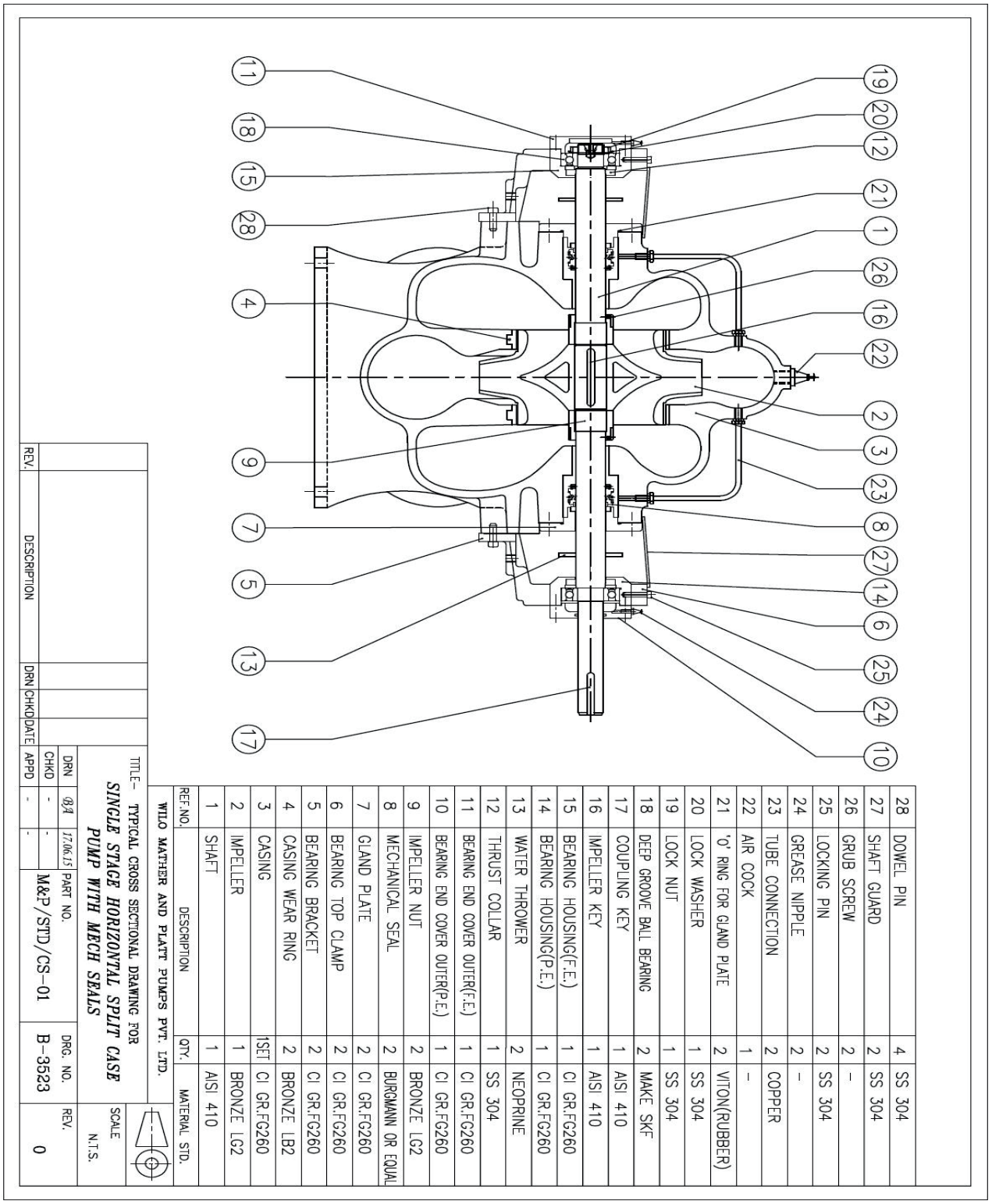

REF.NO.	DESCRIPTION	QTY.	MATERIAL STD.
1	SHAFT	1	AISI 410
2	IMPELLER	1	BRONZE LG2
3	CASING	1SET	CI GR.FG260
4	CASING WEAR RING	2	BRONZE LB2
5	BEARING BRACKET	2	CI GR.FG260
6	BEARING TOP CLAMP	2	CI GR.FG260
7	GLAND PLATE	2	CI GR.FG260
8	MECHANICAL SEAL	2	BURGMANN OR EQUAL
9	IMPELLER NUT	2	BRONZE LG2
10	BEARING END COVER OUTER(P.E.)	1	CI GR.FG260
11	BEARING END COVER OUTER(F.E.)	1	CI GR.FG260
12	THRUST COLLAR	1	SS 304
13	WATER THROWER	2	NEOPRINE
14	BEARING HOUSING(P.E.)	1	CI GR.FG260
15	BEARING HOUSING(F.E.)	1	CI GR.FG260
16	IMPELLER KEY	1	AISI 410
17	COUPLING KEY	1	AISI 410
18	DEEP GROOVE BALL BEARING	2	MAKE SKF
19	LOCK NUT	1	SS 304
20	LOCK WASHER	1	SS 304
21	'O' RING FOR GLAND PLATE	2	VITON(RUBBER)
22	AIR COCK	1	–
23	TUBE CONNECTION	2	COPPER
24	GREASE NIPPLE	2	–
25	LOCKING PIN	2	SS 304
26	GRUB SCREW	2	–
27	SHAFT GUARD	2	SS 304
28	DOWEL PIN	4	SS 304

WILO MATHER AND PLATT PUMPS PVT. LTD.

TITLE– TYPICAL CROSS SECTIONAL DRAWING FOR
SINGLE STAGE HORIZONTAL SPLIT CASE PUMP WITH MECH SEALS

	DRN	CHKD	APPD
	AJ	-	-
DATE	17.06.15	-	-
PART NO.	M&P/STD/CS-01		
DRG. NO.	B-3523		
REV.	0		
SCALE	N.T.S.		

REV.	DESCRIPTION	DRN	CHKD	DATE

ASP Single Stage With Packed Gland Execution

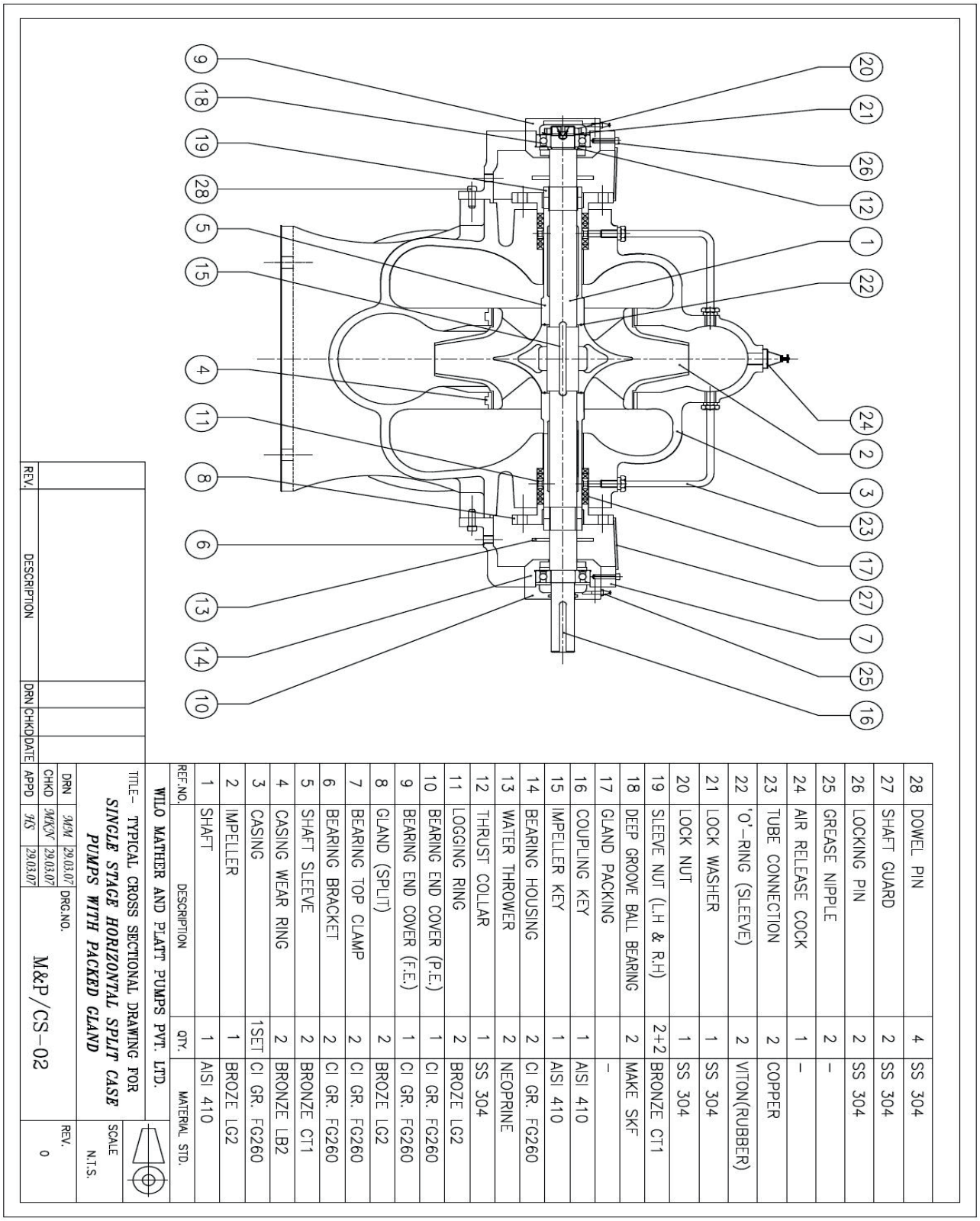

REF.NO.	DESCRIPTION	QTY.	MATERIAL STD.
1	SHAFT	1	AISI 410
2	IMPELLER	1	BRONZE LG2
3	CASING	1SET	CI GR. FG260
4	CASING WEAR RING	2	BRONZE LB2
5	SHAFT SLEEVE	2	BRONZE CT1
6	BEARING BRACKET	2	CI GR. FG260
7	BEARING TOP CLAMP	2	CI GR. FG260
8	GLAND (SPLIT)	2	BRONZE LG2
9	BEARING END COVER (F.E.)	1	CI GR. FG260
10	BEARING END COVER (P.E.)	1	CI GR. FG260
11	LOGGING RING	2	BRONZE LG2
12	THRUST COLLAR	1	SS 304
13	WATER THROWER	2	NEOPRINE
14	BEARING HOUSING	2	CI GR. FG260
15	IMPELLER KEY	1	AISI 410
16	COUPLING KEY	1	AISI 410
17	GLAND PACKING	–	–
18	DEEP GROOVE BALL BEARING	2	MAKE SKF
19	SLEEVE NUT (L.H & R.H)	2+2	BRONZE CT1
20	LOCK NUT	1	SS 304
21	LOCK WASHER	1	SS 304
22	'O'–RING (SLEEVE)	2	VITON(RUBBER)
23	TUBE CONNECTION	2	COPPER
24	AIR RELEASE COCK	1	–
25	GREASE NIPPLE	2	–
26	LOCKING PIN	2	SS 304
27	SHAFT GUARD	2	SS 304
28	DOWEL PIN	4	SS 304

REV.	DESCRIPTION	DRN	CHKD	DATE

DRN	MKM	29.03.07
CHKD	MKM	29.03.07
APPD	HS	29.03.07

TITLE– TYPICAL CROSS SECTIONAL DRAWING FOR
SINGLE STAGE HORIZONTAL SPLIT CASE PUMPS WITH PACKED GLAND

WILO MATHER AND PLATT PUMPS PVT. LTD.

DRG.NO. M&P/CS–02

SCALE N.T.S.

REV. 0

ASP Double Stage With Mechanical Seal Execution

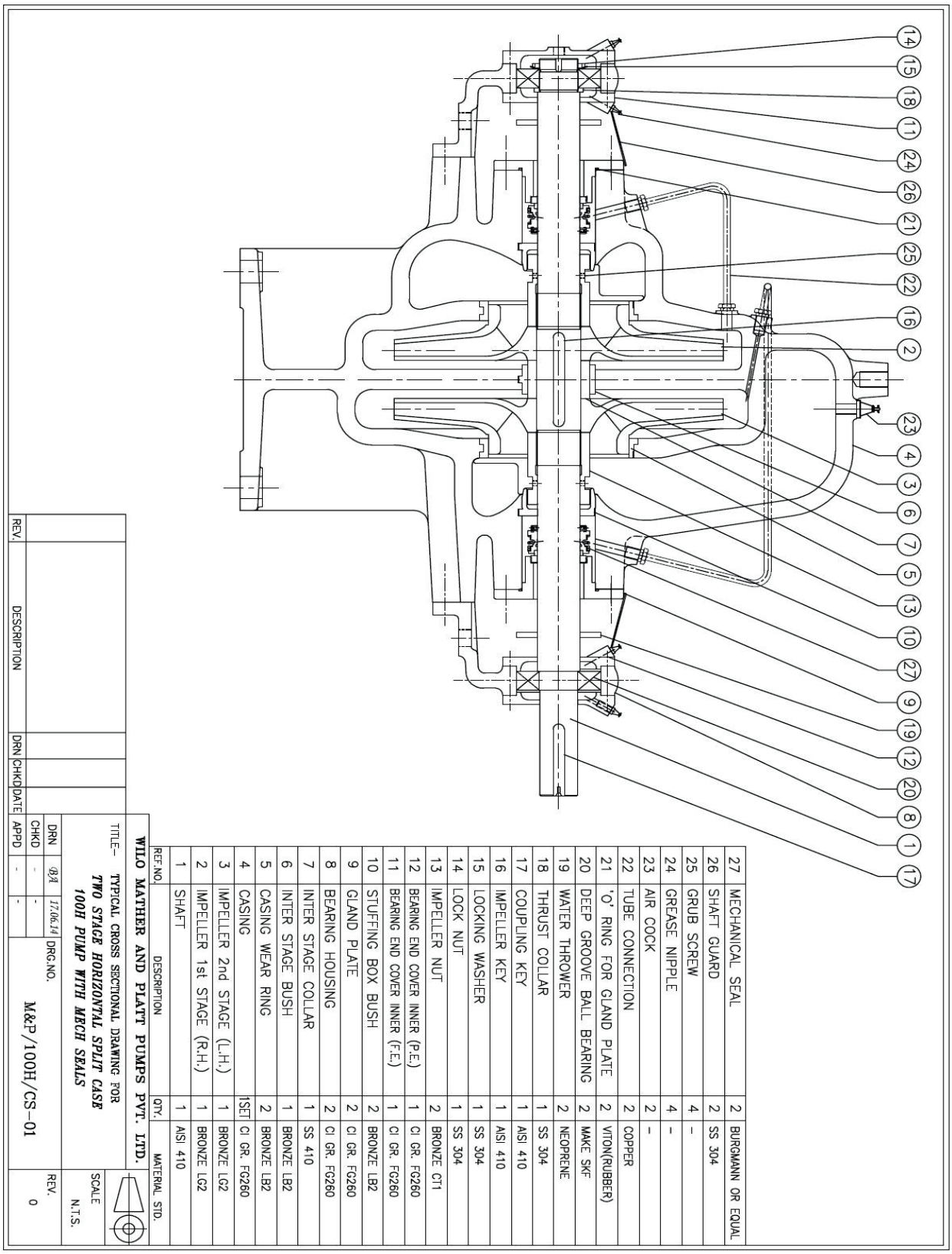

REF.NO.	DESCRIPTION	QTY.	MATERIAL STD.
27	MECHANICAL SEAL	2	BURGMANN OR EQUAL
26	SHAFT GUARD	2	SS 304
25	GRUB SCREW	4	–
24	GREASE NIPPLE	4	–
23	AIR COCK	2	–
22	TUBE CONNECTION	2	COPPER
21	'O' RING FOR GLAND PLATE	2	VITON(RUBBER)
20	DEEP GROOVE BALL BEARING	2	MAKE SKF
19	WATER THROWER	2	NEOPRENE
18	THRUST COLLAR	1	SS 304
17	COUPLING KEY	1	AISI 410
16	IMPELLER KEY	1	AISI 410
15	LOCKING WASHER	1	SS 304
14	LOCK NUT	1	SS 304
13	IMPELLER NUT	2	BRONZE CT1
12	BEARING END COVER INNER (P.E.)	1	CI GR. FG260
11	BEARING END COVER INNER (F.E.)	1	CI GR. FG260
10	STUFFING BOX BUSH	2	BRONZE LB2
9	GLAND PLATE	2	CI GR. FG260
8	BEARING HOUSING	2	CI GR. FG260
7	INTER STAGE COLLAR	1	SS 410
6	INTER STAGE BUSH	1	BRONZE LB2
5	CASING WEAR RING	2	BRONZE LB2
4	CASING	1SET	CI GR. FG260
3	IMPELLER 2nd STAGE (L.H.)	1	BRONZE LG2
2	IMPELLER 1st STAGE (R.H.)	1	BRONZE LG2
1	SHAFT	1	AISI 410

REV.	DESCRIPTION	DRN	CHKD	DATE	APPD

WILO MATHER AND PLATT PUMPS PVT. LTD.

TITLE– TYPICAL CROSS SECTIONAL DRAWING FOR
TWO STAGE HORIZONTAL SPLIT CASE 100H PUMP WITH MECH SEALS

DRN	BJ	17.06.14
CHKD	-	-
APPD	-	-

DRG.NO. M&P/100H/CS–01

SCALE N.T.S.

REV. 0

ASP Double Stage With Packed Gland Execution

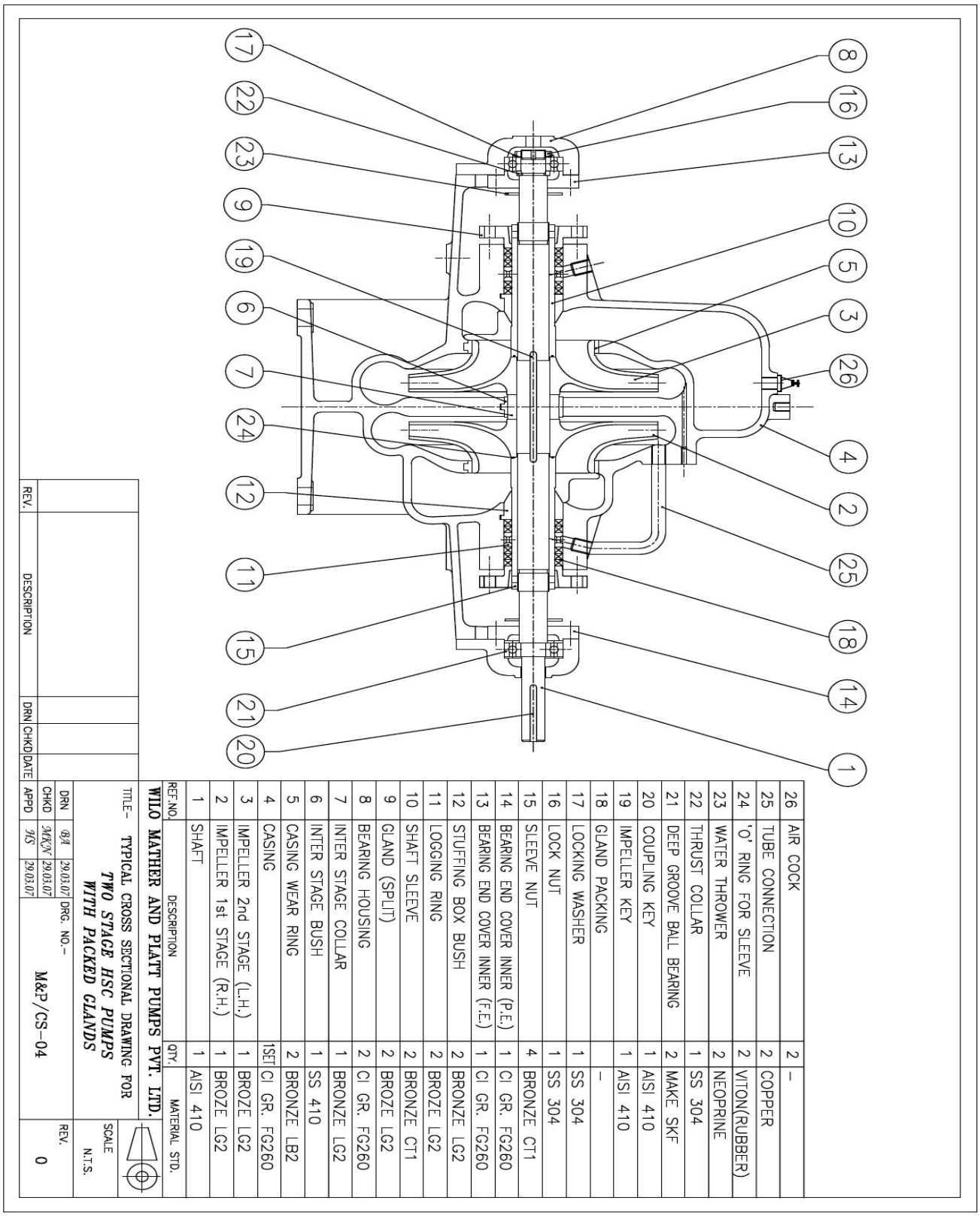

REF.NO.	DESCRIPTION	QTY.	MATERIAL STD.
26	AIR COCK	2	–
25	TUBE CONNECTION	2	COPPER
24	'O' RING FOR SLEEVE	2	VITON(RUBBER)
23	WATER THROWER	2	NEOPRINE
22	THRUST COLLAR	1	SS 304
21	DEEP GROOVE BALL BEARING	2	MAKE SKF
20	COUPLING KEY	1	AISI 410
19	IMPELLER KEY	1	AISI 410
18	GLAND PACKING	–	–
17	LOCKING WASHER	1	SS 304
16	LOCK NUT	1	SS 304
15	SLEEVE NUT	4	BRONZE CT1
14	BEARING END COVER INNER (P.E.)	1	CI GR. FG260
13	BEARING END COVER INNER (F.E.)	1	CI GR. FG260
12	STUFFING BOX BUSH	2	BRONZE LG2
11	LOGGING RING	2	BROZE LG2
10	SHAFT SLEEVE	2	BRONZE CT1
9	GLAND (SPLIT)	2	BROZE LG2
8	BEARING HOUSING	2	CI GR. FG260
7	INTER STAGE COLLAR	1	BRONZE LG2
6	INTER STAGE BUSH	1	SS 410
5	CASING WEAR RING	2	BRONZE LB2
4	CASING	1SET	CI GR. FG260
3	IMPELLER 2nd STAGE (L.H.)	1	BROZE LG2
2	IMPELLER 1st STAGE (R.H.)	1	BROZE LG2
1	SHAFT	1	AISI 410

REV.	DESCRIPTION	DRN	CHKD	DATE

DRN	BJA	29.03.07
CHKD	MKJV	29.03.07
APPD	JAS	29.03.07

TITLE– TYPICAL CROSS SECTIONAL DRAWING FOR *TWO STAGE HSC PUMPS WITH PACKED GLANDS*

WILO MATHER AND PLATT PUMPS PVT. LTD.

DRG. NO.– M&P/CS–04

SCALE N.T.S.

REV. 0

ASP Through Bore With Mechanical Seal Execution

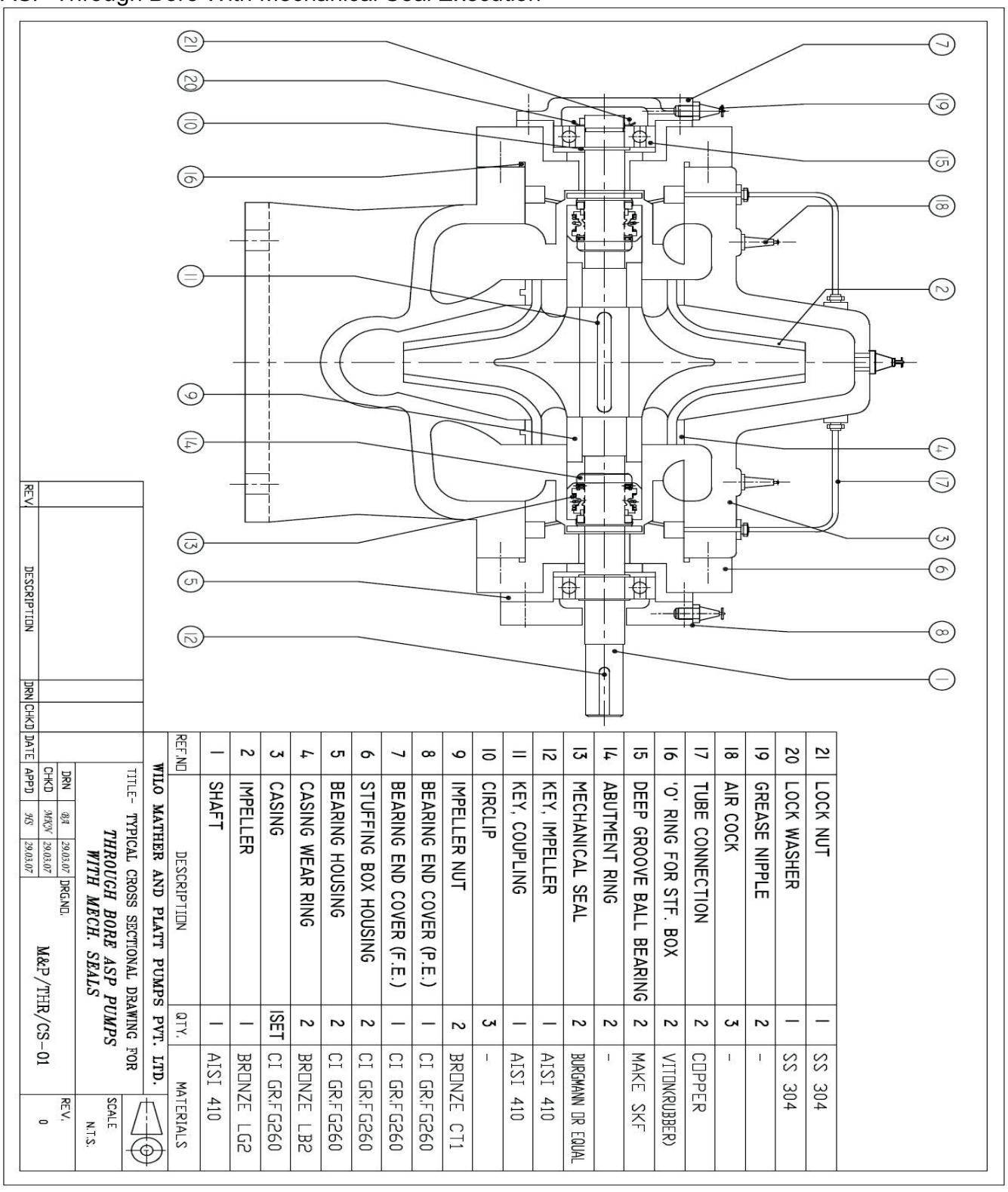

REF.NO	DESCRIPTION	QTY.	MATERIALS
1	SHAFT	1	AISI 410
2	IMPELLER	1	BRONZE LG2
3	CASING	1SET	CI GR.FG260
4	CASING WEAR RING	2	BRONZE LB2
5	BEARING HOUSING	2	CI GR.FG260
6	STUFFING BOX HOUSING	2	CI GR.FG260
7	BEARING END COVER (F.E.)	1	CI GR.FG260
8	BEARING END COVER (P.E.)	1	CI GR.FG260
9	IMPELLER NUT	2	BRONZE CT1
10	CIRCLIP	3	-
11	KEY, COUPLING	1	AISI 410
12	KEY, IMPELLER	1	AISI 410
13	MECHANICAL SEAL	2	BURGMANN OR EQUAL
14	ABUTMENT RING	2	-
15	DEEP GROOVE BALL BEARING	2	MAKE SKF
16	'O' RING FOR STF. BOX	2	VITON(RUBBER)
17	TUBE CONNECTION	2	COPPER
18	AIR COCK	3	-
19	GREASE NIPPLE	2	-
20	LOCK WASHER	1	SS 304
21	LOCK NUT	1	SS 304

REV.	DESCRIPTION	DRN	CHKD	DATE

WILO MATHER AND PLATT PUMPS PVT. LTD.

TITLE- TYPICAL CROSS SECTIONAL DRAWING FOR *THROUGH BORE ASP PUMPS WITH MECH. SEALS*

DRN	AJ	29.03.07	DRG.NO.
CHKD	MKK	29.03.07	M&P/THR/CS-01
APPD	VKS	29.03.07	

SCALE N.T.S.

REV. 0

Appendix A:

Recommended Tightening Torques and Induced Loads

Thread Size	Stress Area mm^2	Property Class 8.8		Property Class 10.9	
		Torque	Induced Load	Torque	Induced Load
		Nm	N	Nm	N
M4	8.78	3	3877	4.3	5695
M5	14.2	6	6361	8.9	9344
M6	20.1	10.3	9005	15.1	13230
M8	36.6	25	16400	37	24080
M10	58	50	26360	74	38700
M12	84.3	67	38300	128	56300
(M14)	115	139	52300	205	76800
M16	157	214	72300	316	106300
(M16)	192	304	91200	435	129900
M20	245	431	116400	615	165800
(M22)	303	586	144000	835	205100
M24	353	745	167700	1060	238700
(M27)	459	1090	218100	1560	310400
M30	561.0	1480	268600	2105	379400
(M33)	694.0	2013	329800	2865	469300
(M36)	617.0	2586	388200	3680	552500
(M39)	976.0	3348	463600	4760	660000

APPENDIX B:

Useful Formulae

Pressure = p = Head of water column x density x gravitational constant
Flow = Velocity x Cross Sectional Area = v. A
Velocity Head = $v^2/2g$
1 USGPM = 4.404 m^3/hr = 1.2 IGPM
1 PSI = (feet x S.G) / 2.31

Affinity Laws:

$$\frac{Q_1}{Q_2} = \frac{N_1}{N_2}, \quad \frac{H_1}{H_2} = \left(\frac{N_1}{N_2}\right)^2, \quad \frac{P_1}{P_2} = \left(\frac{N_1}{N_2}\right)^3$$

Where, N = Speed, RPM
Q = Capacity
H = Head

Power Calculation:

$$P = \frac{Q(LPS)\times H(m)}{1.02\times Efficiency} = \frac{Q(m^3/hr)\times H(m)}{3.67\times Efficiency} kW$$

Shaft Stress:

$$P(hp) = \frac{S(psi)\times N\times d^3(inch)}{321000}$$, S = Shaft stress, d = Shaft diameter at coupling

Specific Speed

$$Ns = \frac{N\times\sqrt{Q}}{H^{3/4}}$$

where, N = pump speed, rpm
Q = capacity at BEP, full diameter, GPM
H = pump head per stage at BEP, full diameter, ft

Suction Specific Speed

$$Nss = \frac{N\times\sqrt{Q}}{NPSHr^{3/4}}$$

where, N = pump speed, rpm
Q = capacity at BEP, full diameter, GPM (half flow for double suction impeller)
NPSHr = Net Positive Suction Head required by the pump at BEP, ft

APPPENDIX C:

Material Equivalent Chart:

Material	British Standard	ASTM Standard	DIN Standard
Cast Iron	BS 1452 Gr260	A48 Class 35	GG25
Nodular Cast Iron	BS 2789 Gr500	A536 60-45-12	GGG50
Cast Steel	BS 3100 GrA1	A216 WCB	GS-C25
Stainless Steel (Cast)	BS 3100-316 C16	A743 GrCF8M	G-X6CrMo165
	BS 3100-410 C21	A743 GrCA15	G-X 12Cr14
Ni-resist	BS 3468 L-NiCuCr20 2	A436 Type 1	GCI –NiCuCr1562
Bronze	BS 1400 GrLG2	B584 C83600	G-CuSn 5 ZnPb
	BS 1400 GrAB2	B148 958	G-Cu Al 10 Ni
Zinc Free Bronze	BS 1400 GrCT1	B427 C90700	G-CuSn10
HT Steel	BS 970-708 M40	A322 Gr4140	42 CrMo4
Stainless Steel (Non-cast)	BS 970 410 S21	A 182 Type 410	X 10 Cr 13
	BS 970 316 S 16	A276 Type 316	X5 CrNiMo1810
	BS 970 304 S15	A276 Type 304	X5 CrNi189

APPPENDIX D:

PRODUCT RANGE:

Sr. No.	Pump Model	Stage	Sr. No.	Pump Model	Stage	Sr. No.	Pump Model	Stage	Sr. No.	Pump Model	Stage
1	ASP 100A	Single	17	ASP 200BS	Single	33	ASP 300C	Single	49	ASP 80BT	Single
2	ASP 100AL	Single	18	ASP 200C	Single	34	ASP 300D	Single	50	ASP 80CT	Single
3	ASP 100B	Single	19	ASP 200CS	Single	35	ASP 300DS	Single	51	ASP 100AST	Single
4	ASP 100C	Single	20	ASP 200D	Single	36	ASP 300E	Single	52	ASP 150BT	Single
5	ASP 125A	Single	21	ASP 200DS	Single	37	ASP 350C	Single	53	ASP 200BT	Single
6	ASP 125B	Single	22	ASP 200E	Single	38	ASP 350CS	Single	54	ASP 65G	Double
7	ASP 125BS	Single	23	ASP 250A	Single	39	ASP 350D	Single	55	ASP 80G	Double
8	ASP 125C	Single	24	ASP 250AL	Single	40	ASP 350E	Single	56	ASP 80H	Double
9	ASP 125D	Single	25	ASP 250AS	Single	41	ASP 400A	Single	57	ASP 100G	Double
10	ASP 150A	Single	26	ASP 250B	Single	42	ASP 400AS	Single	58	ASP 100HA	Double
11	ASP 150B	Single	27	ASP 250C	Single	43	ASP 400AL	Single	59	ASP 100HB	Double
12	ASP 150C	Single	28	ASP 250D	Single	44	ASP 400C	Single	60	ASP 100HB (EL2)	Double
13	ASP 150D	Single	29	ASP 250E	Single	45	ASP 400D	Single	61	ASP 125G	Double
14	ASP 150E	Single	30	ASP 300A	Single	46	ASP 50AT	Single	62	ASP 150G	Double
15	ASP 200A	Single	31	ASP 300B	Single	47	ASP 50BT	Single	63	ASP 150H	Double
16	ASP 200B	Single	32	ASP 300BS	Single	48	ASP 80AST	Single	64	ASP 250G	Double

This manual has to be kept with the end user/ maintenance staffs at site

For any clarification, routine/emergency repair/maintenance, please contact to your purchaser or:

WILO MATHER AND PLATT PUMPS PVT LTD
Shaila Tower, 3rd Floor, J1/16, EP Block, Sector V, Kolkata-700091, India
Phone: +91 33 3002 8903, Fax: +91 33 3002 8912
E-mail: tapas.bhar@matherplatt.com; surajit.sarkar@matherplatt.com & sohan.das@matherplatt.com
Web: www.matherplatt.com

Quality Management System ISO 9001: 2008
For Design, Manufacturing, Assembly and Marketing of Centrifugal Pumps

WILO Mather and Platt Pumps Pvt. Ltd.
"Shaila Towers", 3rd Floor,
J1 / 16, EP Block, Sector – V,
Salt Lake City,
Kolkata – 700 091

T +91 33 30028916
Service Toll Free: 1800 266 8866

www.wilo.in
sales.in@wilo.com

www.facebook.com/WiloIndia

Tech. matter subject to change without prior notice
Images are for representation purpose only, actual product may differ.