Pioneering for You

wilo

Wilo Mather and Platt Pumps Pvt. Ltd.
Mumbai–Pune Road,
Chinchwad, Pune – 411019.
Maharashtra (India)
T + 91 20 27442100
F + 91 20 27442111

Sales Office:
WILO Mather and Platt Pumps Pvt. Ltd.
1st Floor, “One Elpro Park”,
Elpro Compound, CTS No.4270,
Chinchwad, Pune – 411033.
Maharashtra (India)
T +91 20 67347100
F +91 20 67347112

Service Toll Free: 1800 266 8866

www.wilo.in
sales.in@wilo.com

www.facebook.com/WiloIndia

Tech. matter subject to change without prior notice
Product image shown may represent range of product, or be for illustration purposes only &
may not be an exact representation of the product

SB_WILO_WROX_01_A4_23122021_E

Pioneering for You

wilo

High-pressure multistage centrifugal pumps

Vertical Inline Pump – WROX

Pioneering for You.

Our promise to you.
The Wilo Group is one of the world's leading premium providers of pumps and pump systems for the building services, water management and industrial sectors. In the past decade, we have developed from a hidden champion into a visible and connected champion. Today, Wilo has around 8,000 employees worldwide.

Our innovative solutions, smart products and individual services move water in an intelligent, efficient and climate-friendly manner. We are also making an important contribution to climate protection with our sustainability strategy and in conjunction with our partners. We are systematically pressing ahead with the digital transformation of the Group. We are already the digital pioneer in the industry with our products and solutions, processes and business models.

Sustainably better.
One of the most important tasks in times of limited natural resources is the responsible consumption of water, a resource that is becoming increasingly scarce. Efficiency, connectivity and safety will become ever more important in the future. We aspire to offer you sustainable, user-friendly and high-performance solutions for building services and water management that are ahead of their time. We work closely with our customers to create innovative products and systems that perfectly match their requirements and are rounded off with convenient services. The result is integrated solutions you can rely on at all times.

The company at a glance

WILO SE, based in Dortmund. Germany is one of the world's leading manufacturers of pumps and pumping systems for heating, cooling and air conditioning, water supply, sewage disposal and industrial applications. With more than 15 production sites over 60 subsidiaries, and more than 7,800 employees around the world, Wilo is a true global player.
Founded in 1872 as the Louis Opléinder Copper and Brass Goods Factory, the company has developed to become the leading innovator in the high-tech pump sector.

World map with local & global presence of WILO

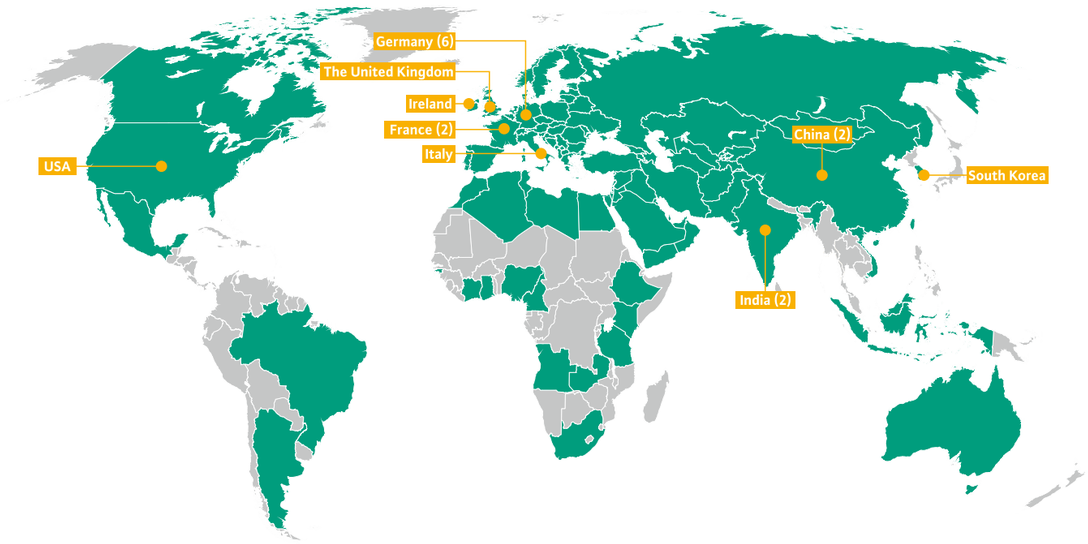

Countires in which Wilo is represented by a subsidiary

Countires in which Wilo have production locations

Chinchwad, Pune Plant

Kolhapur Plant

Mather and Platt started its Indian operations in 1913 from Kolkata, and has been fulfilling the need of water supply for more than 100 years in India for segments like building services, water management and industries.
We started our operation at Chinchwad works in Pune, Maharashtra in year 1959.

Mather and Platt Pump Ltd became part of WILO SE in the year 2005
And in year 2014, WILO Mather and Platt Pumps Ltd. Become WILO Mather and Platt Pumps Pvt. Ltd.

In the year 2009 a new state of art manufacturing facility covering over approx. 6000 sq. meters has been built at Kolhapur around 260 km from Pune to manufacture the latest high efficiency products of Wilo India.

The Pune & Kolhapur plants have acquired ISO 9001, ISO 14001 and OSHAS 18001 and all products are CE certified.

Wilo-WROX

Design
Non-self-priming multistage pump

Application
- Boiler Feed
- Industrial Circulation System
- Process Engineering
- Cooling Water Circulation Systems
- Dust Separation Systems
- RO - Domestic / Industrial Systems
- Industrial Washing M/C
- Car & Bike Washing Systems
- Rail Coach Cleaning

Type key

Example: **WROX804-5/25/V/3-415-50-2-IE3/OEM/01**

WROX Vertical Inline High Pressure Pump

8 Nominal flow in m3/h

04 Number of impellers

5 Material
2 = 1.4404 [AISI 316L)
5= pump base EN-GJL-250 (cataphoretic coating), hydraulics 1.4301 (AISI 304)

Flange type
25 = flange PN25 (round)

E Seal type
E = Sic/Carbon (Face Combination) + EPDM O-ring
V = Sic/Sic (Face Combination) + Viton O-ring

3 3 = 3~ (three-phase current)

415 Connection voltage in V

50 Frequency in Hz

2 Number of poles

IE3 = Motor Efficiency level

OEM = Original Equipment Manufacturer

01 = Application Category
- 01 = Chillers & Washing M/C
- 02 = Domestic RO
- 03 = Dairy
- 04 = Automatic Car & Bike wash systems
- 05 = Boiler
- 06 = Pharma & Industrial Equipment – SS316

Special features/product benefits
- All parts that come in contact with the fluid are made of stainless steel 1.4301 (AISI 304) or 1.4404 (AISI 316 L)
- **Equipment/function**
- Stainless steel pump in inline design
- Version: PN25 with round flange
- IEC standard motor

Technical data
- Fluid temperature 0°C to 90°C - Viton seal -15°C to 120°C - EPDM seal
- Max. operating pressure 25 bar
- Max. inlet pressure 10 bar
- Protection class IP 55
- Flange connection PN 25

Technical data Wilo-WROX

	Wilo-WROX			
	1	2	4	8
Approved fluids				
Potable water, heating water, process water	•	•	•	•
Condensate	•	•	•	•
Water/glycol mixtures (max. 40 %; with admixtures exceeding 10 %, the pumping data must be checked)	•	•	•	•
Other low viscous fluids (without abrasive or long-fibre constituents, provided they do not corrode the materials used)	•	•	•	•
Power				
Max. volume flow [m3/h]	3.0	5.0	8.0	14.0
Max. delivery head [m]	230	230	210	230
Fluid temperature	-15°C."120°C			
Max. ambient temperature	40	40	40	40
Operating pressure	25	25	25	25
Inlet pressure	10	10	10	10
Nominal speed	2950			
Motor				
Mains connection 3~ (permitted voltage tolerance +/- 10%)	415V, 50Hz	415V, 50Hz	415V, 50Hz	415V, 50Hz
Insulation class	F	F	F	F
Protection class	IP55	IP55	Ip55	IP55
Connections				
Nominal diameter of pipe connections on suction side	-	-	-	-
Nominal diameter of pipe connections on pressure side	-	-	-	-
Flange connections DN Size	Dn25	Dn25	Dn25	DN25
Materials				
Impeller (standard)	SS304 / SS316L	SS304 / SS316L	SS304 / SS316L	SS304 / SS316L
Stage chambers	SS304 / SS316L	SS304 / SS316L	SS304 / SS316L	SS304 / SS316L
Pump Casing	CI / SS316L	CI / SS316L	CI / SS316L	CI / SS316L
Pump shaft	SS304 / SS316L	SS304 / SS316L	SS304 / SS316L	SS304 / SS316L
Mechanical Seal	EPDM / Viton	EPDM / Viton	EPDM / Viton	EPDM / Viton
Housing Pipe	SS304 / SS316L	SS304 / SS316L	SS304 / SS316L	SS304 / SS316L
Pump Base	CI (EN-GJL-250)	CI (EN-GJL-250)	CI (EN-GJL-250)	CI (EN-GJL-250)

Pump curves Wilo- WROX 1 Series

Wilo-WROX 102 - 124

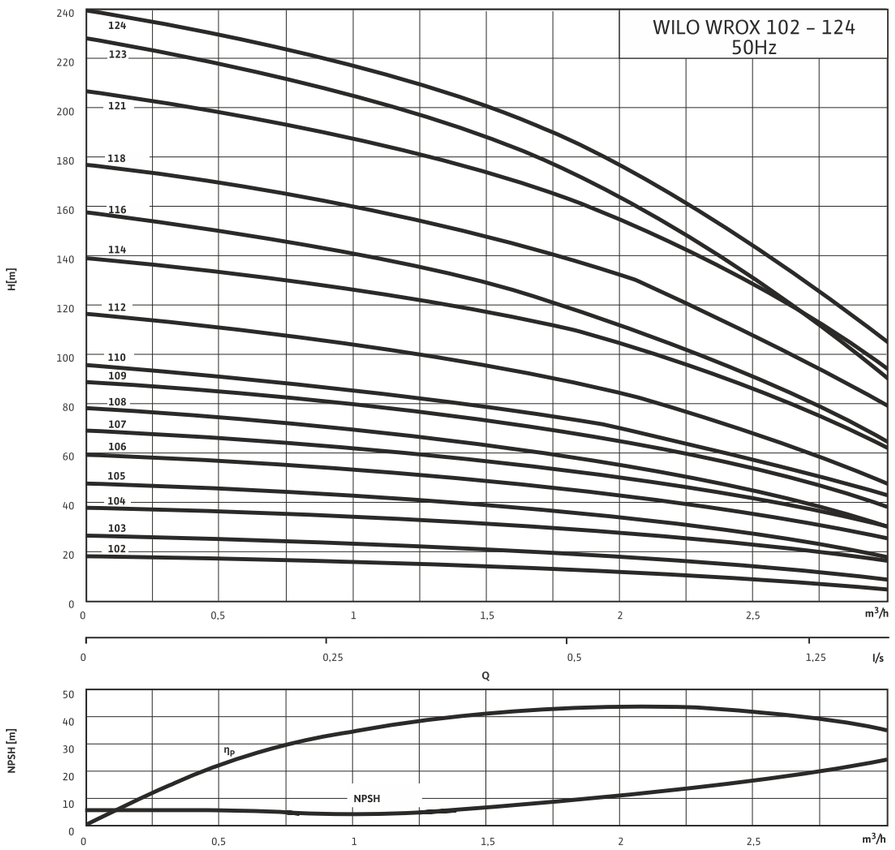

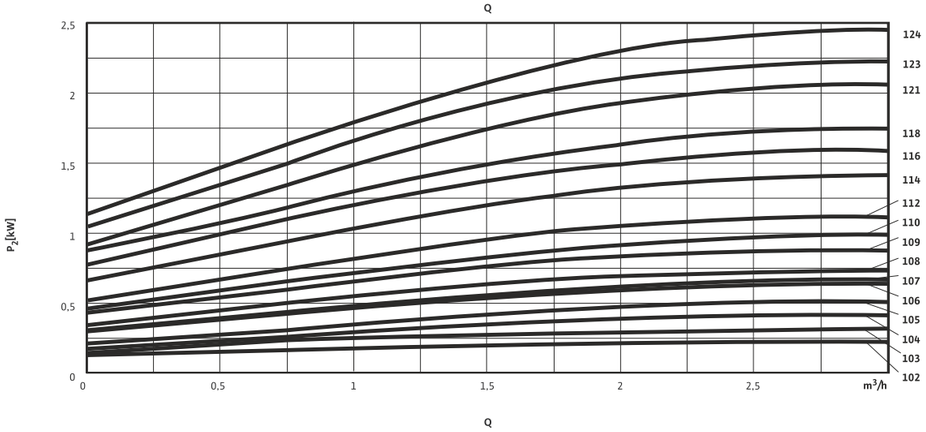

Pump curves Wilo-WROX 2 Series

Wilo-WROX 202 - 220

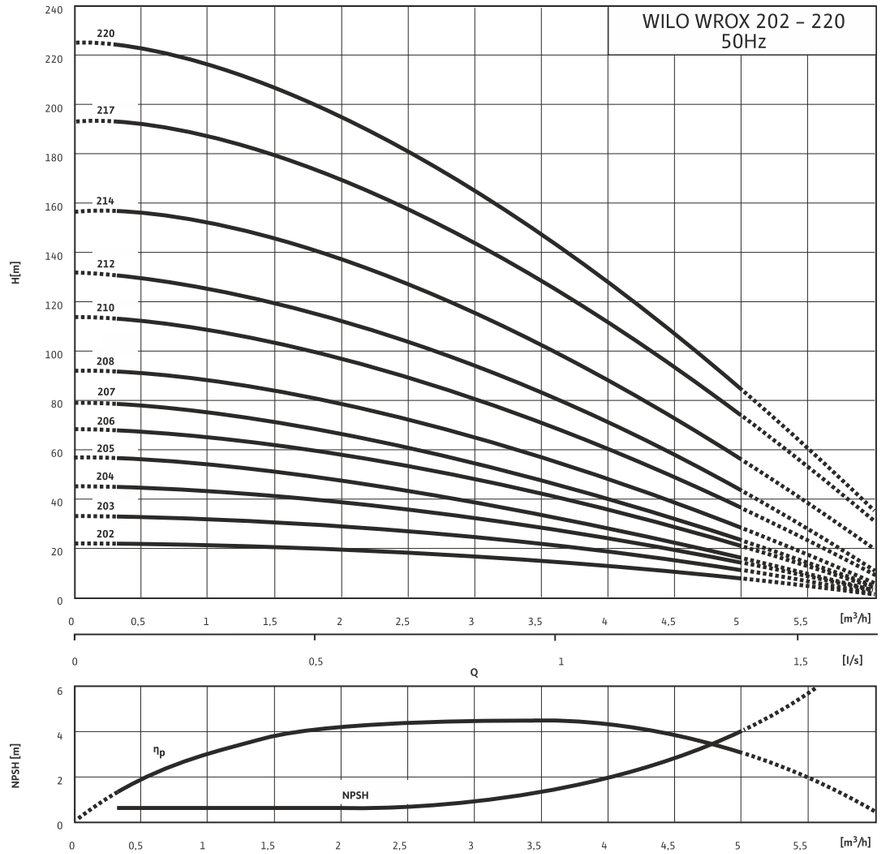

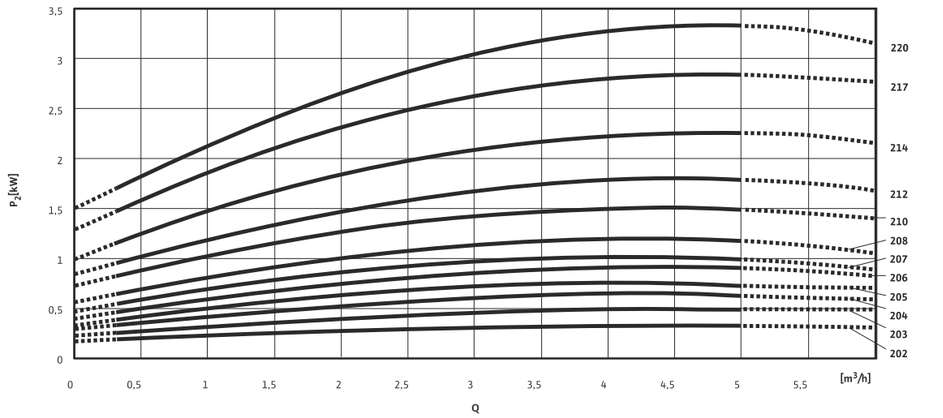

Pump curves Wilo-WROX 4 Series

Wilo-WROX 402 - 419

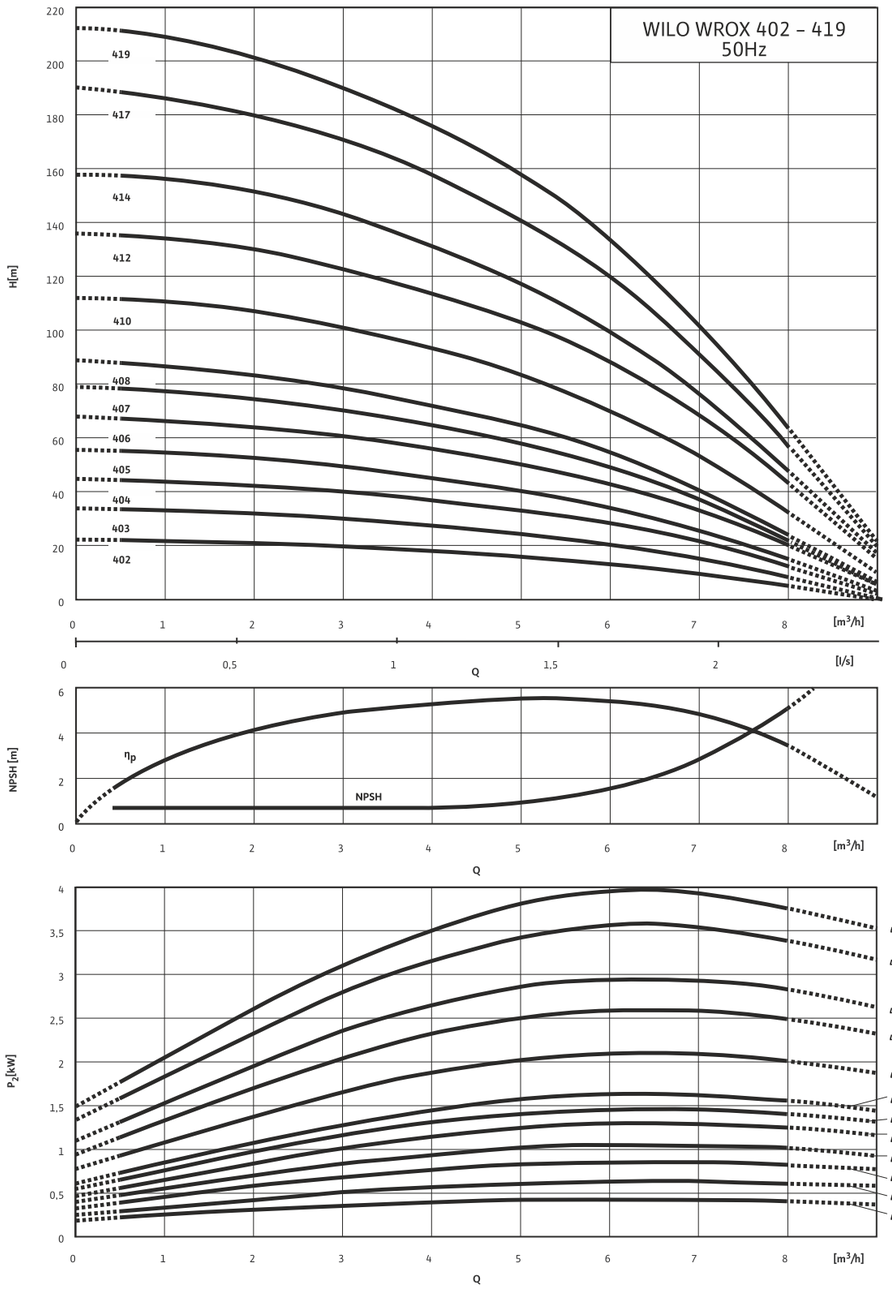

Pump curves Wilo-WROX 8 Series

Wilo-WROX 802 - 819

2-pole, 50 Hz

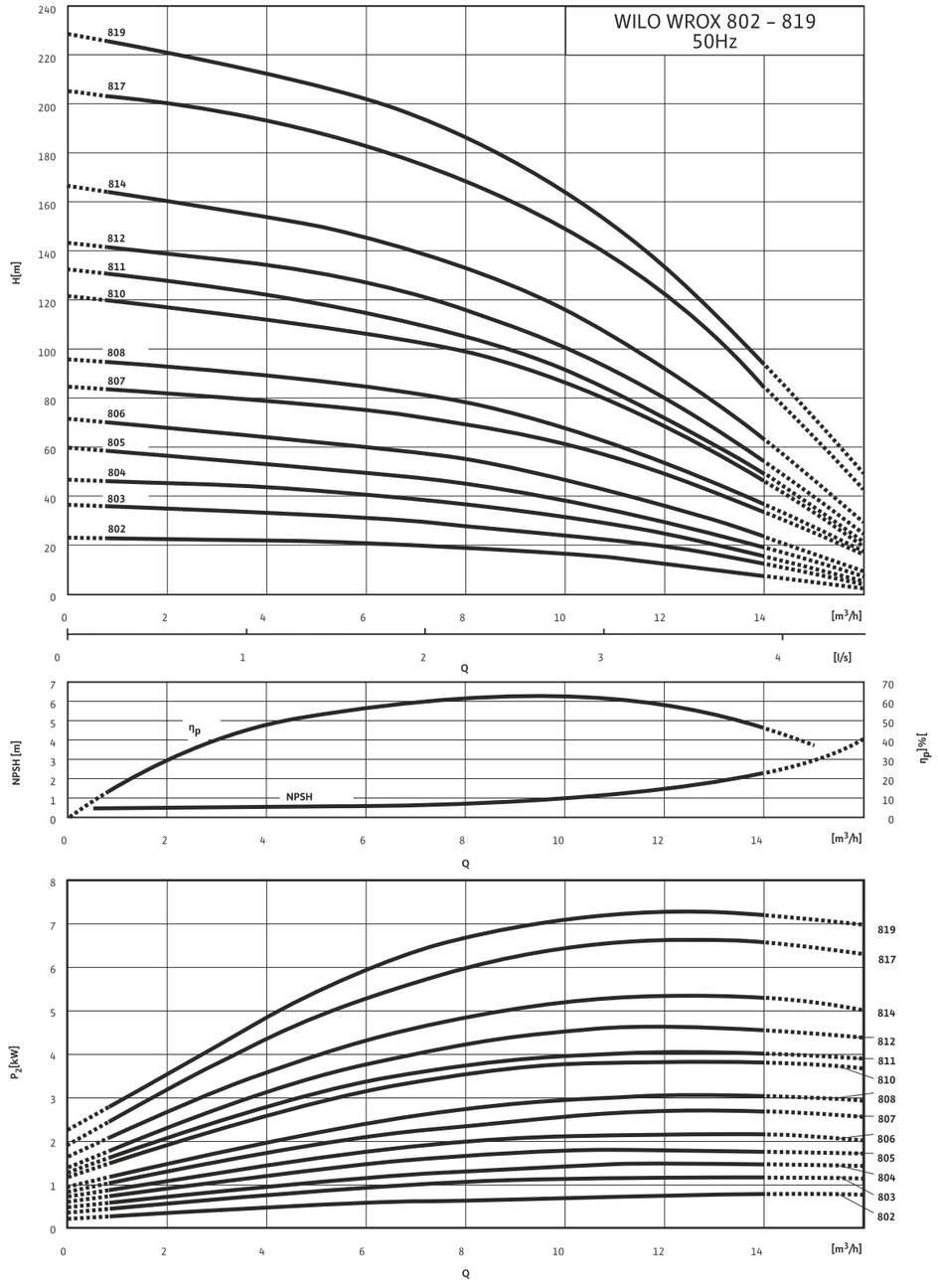

Terminal diagram, motor rating & motor data, Wilo-WROX 1/2/4/8

Motor Rating

WILO WROX...	Nominal motor power P_2 [kW]
WROX 102	0.37
WROX 103	0.37
WROX 104	0.55
WROX 105	0.55
WROX 106	0.75
WROX 107	0.75
WROX 108	0.75
WROX 109	1.10
WROX 110	1.10
WROX 112	1.10
WROX 114	1.50
WROX 116	2.20
WROX 118	2.20
WROX 121	2.20
WROX 123	2.20
WROX 124	3.00
WROX 202	0.75
WROX 204	0.75
WROX 205	1.10
WROX 206	1.10
WROX 207	1.10
WROX 208	1.50
WROX 210	1.50
WROX 212	2.20
WROX 214	2.20
WROX 217	3.00

Motor data

Wilo WROX...	Nominal motor power P_2 [kW]
WROX 220	4.00
WROX 402	0.55
WROX 403	1.10
WROX 404	0.75
WROX 405	1.10
WROX 406	1.50
WROX 407	1.50
WROX 408	2.20
WROX 410	2.20
WROX 412	3.00
WROX 414	3.00
WROX 417	4.00
WROX 419	4.00
WROX 802	0.75
WROX 803	1.10
WROX 804	1.50
WROX 805	2.20
WROX 806	2.20
WROX 807	3.00
WROX 808	3.00
WROX 810	4.00
WROX 811	4.00
WROX 812	5.50
WROX 814	5.50
WROX 817	7.50
WROX 819	7.50

Pump curves Wilo-WROX 1/2/4/8

Dimension drawing

Wilo-WROX 102 – 124

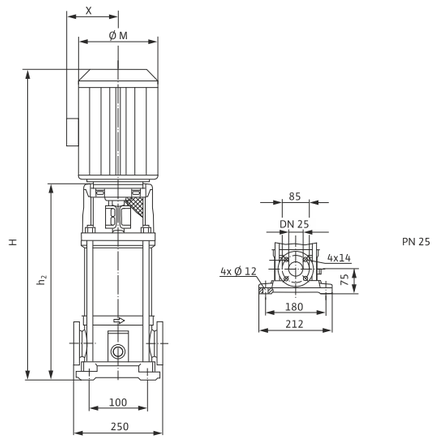

Dimension drawing

Wilo-WROX 202 – 220

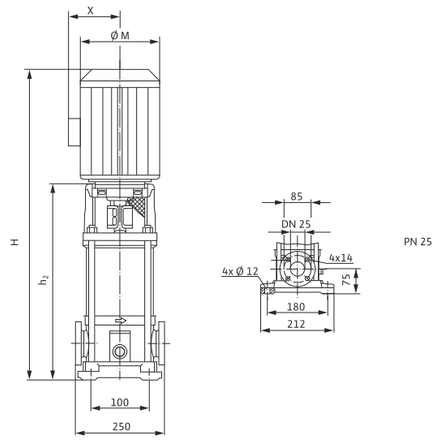

Dimension drawing

Wilo-WROX 402 – 419

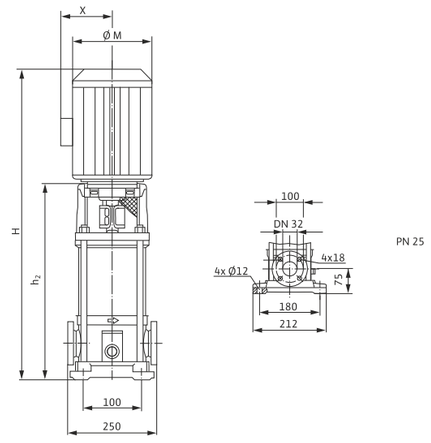

Dimension drawing

Wilo-WROX 802 – 819

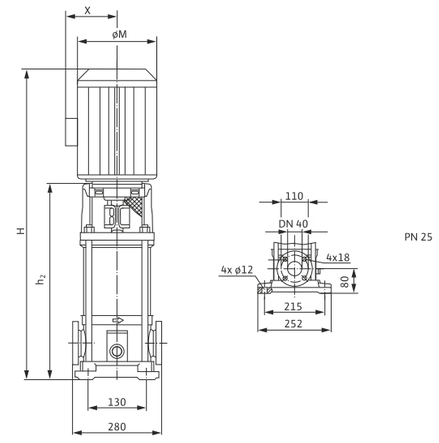

Dimensions, weights Wilo-WROX 1/2/4/8

Dimensions, weights-Version PN 25 round flange

Wilo WROX...	Dimensions					Weight approx	
			3~	3~	3~	3~	3~
			415V	415V	415V	415V	415V
	E	h2	H	øM	X	m	
	[mm]					SS316L (kg)	CI (kg)
WROX 102	250	330.0	552.5	140	118	19.9	26.4
WROX 103	250	330.0	552.5	140	118	20.1	26.6
WROX 104	250	329.5	552.0	140	118	20.9	27.4
WROX 105	250	369.5	592.0	140	118	22.1	28.6
WROX 106	250	380.0	623.5	170	127	25.0	31.5
WROX 107	250	399.5	643.0	170	127	25.7	32.2
WROX 108	250	439.5	683.0	170	127	26.9	33.4
WROX 109	250	439.5	683.0	170	127	28.3	34.8
WROX 110	250	459.5	703.0	170	127	29.0	35.5
WROX 112	250	499.5	743.0	170	127	30.3	36.8
WROX 114	250	549.5	816.0	193	151	36.7	43.2
WROX 116	250	589.5	856.0	193	151	38.9	45.4
WROX 118	250	629.5	896.0	193	151	40.3	46.8
WROX 121	250	689.5	956.0	193	151	44.4	50.9
WROX 123	250	749.5	1016.0	193	151	46.3	52.8
WROX 124	250	759.5	1054.5	217	160	51.1	57.6

Dimensions, weights Wilo-WROX 1/2/4/8

Dimensions, weights-Version PN 25 round flange

Wilo WROX..	Dimensions					Weight approx	
			3~	3~	3~	3~	3~
			415V	415V	415V	415V	415V
	E	h2	H	øM	X	m	
	[mm]					SS316L (kg)	CI (kg)
WROX 202	250	321.5	544.0	140	118	18.8	25.3
WROX 203	250	321.5	506.5	140	118	18.7	25.2
WROX 204	250	355.5	599.0	170	127	22.3	28.8
WROX 205	250	379.5	623.0	170	127	22.9	29.4
WROX 206	250	403.5	647.0	170	127	24.9	31.3
WROX 207	250	437.5	681.0	170	127	24.8	33.4
WROX 208	250	461.5	728.0	193	151	26.9	37.0
WROX 210	250	509.5	776.0	193	151	30.5	38.3
WROX 212	250	557.5	824.0	193	151	31.8	40.9
WROX 214	250	605.5	872.0	193	151	34.4	44.1
WROX 217	250	687.5	982.5	217	160	37.6	51.2
WROX 220	250	759.5	1054.5	217	160	44.7	62.1
WROX 402	250	321.5	506.5	140	118	55.6	24.7
WROX 403	250	331.5	575.5	170	127	18.7	27.7
WROX 404	250	355.5	599.0	170	127	21.7	29.6
WROX 405	250	355.5	599.0	170	127	23.6	30.2
WROX 406	250	413.5	680	193	151	24.2	35.3
WROX 407	250	437.5	704.0	193	151	29.4	36.0
WROX 408	250	461.5	728.0	193	151	30.0	37.4
WROX 410	250	509.5	776.0	193	151	31.4	40.6
WROX 412	250	567.5	776.0	217	160	34.6	47.1
WROX 414	250	615.5	910.5	217	160	41.1	48.3
WROX 417	250	687.5	982.5	217	160	42.3	59.8
WROX 419	250	769.5	548.5	217	160	53.8	61.7
WROX 802	280	333.5	577.0	170	127	55.7	33.9
WROX 803	280	263.5	577.0	170	127	22.9	35.8
WROX 804	280	403.5	670.0	193	151	24.8	41.1
WROX 805	280	433.5	700.0	193	151	30.1	42.6
WROX 806	280	463.5	730.0	193	151	31.6	45.5
WROX 807	280	503.5	798.5	217	160	34.5	50.7
WROX 808	280	533.5	828.5	217	160	39.7	15.4
WROX 810	280	593.5	888.5	217	160	4.4	62.2
WROX 811	280	653.5	948.5	217	160	51.2	63.7
WROX 812	280	653.5	978.5	235	168	52.7	68.0
WROX 814	280	713.5	1038.5	235	168	58.4	69.4
WROX 817	280	823.0	1219.0	279	182	80.3	91.3
WROX 819	280	883.0	1279.0	279	182	81.7	92.7