May 28, 2004

340 SERIES HD

AMERICAN-MARSH PUMPS

A WILO BRAND

DOUBLE SUCTION SPLITCASE PUMP ONLY

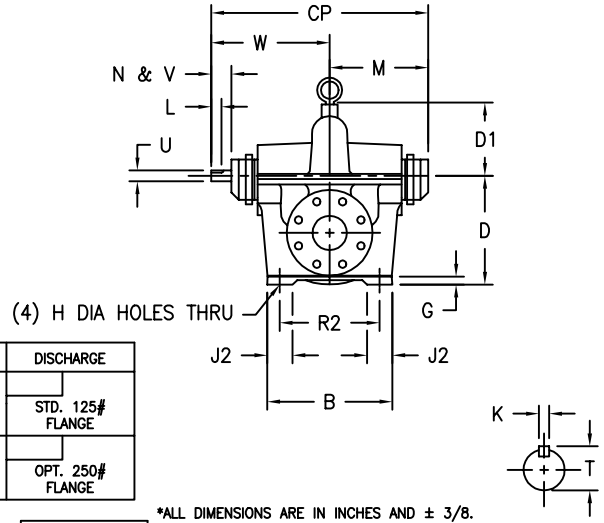

SUCTION	DISCHARGE
STD. 125# FLANGE	STD. 125# FLANGE
OPT. 250# FLANGE	OPT. 250# FLANGE

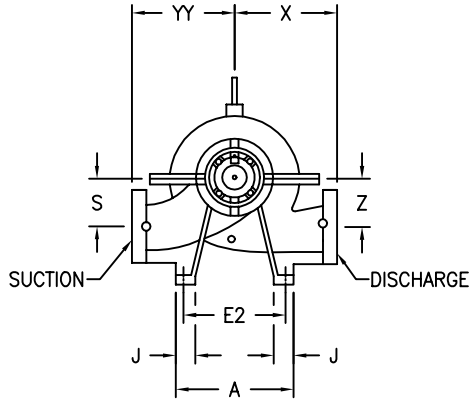

RIGHT HAND ROTATION
(STANDARD)

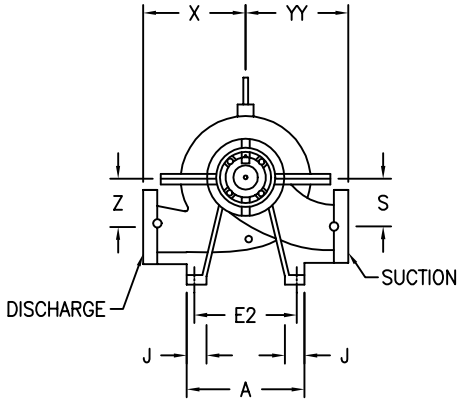

LEFT HAND ROTATION
(NON–STANDARD)

*ALL DIMENSIONS ARE IN INCHES AND ± 3/8.
*NOT FOR CONSTUCTION. UNLESS CERTIFIED BY ENGINEERING.

PUMP SIZE																			PACKED		PACKED	SEALED		SEALED			
DISCH	SUCT	CASE BORE	A	B	D	D1	E2	G	H	J	J2	K	L	N & V	R2	S	T	U	M	W	CP	M	W	CP	X	YY	Z
2 1/2	3	10	13.813	11.813	9.875	7.750	11.438	1.000	0.875	2.563	2.563	0.250	1.750	3.125	9.438	5.125	1.250	1.125	12.938	16.313	29.250	9.625	12.938	22.563	8.875	11.063	5.125
3	4	10	13.813	11.813	11.000	7.625	11.438	1.000	0.875	2.563	2.563	0.250	1.750	3.125	9.438	5.125	1.250	1.125	12.938	16.313	29.250	9.625	12.938	22.563	9.063	10.625	5.125
4	6	10	13.813	11.813	13.375	8.563	11.438	1.000	0.875	2.938	2.938	0.500	3.750	4.313	9.438	6.688	1.875	1.625	15.688	20.250	35.938	11.813	16.375	28.188	9.875	12.188	6.688
5	6	10	15.750	13.000	13.375	8.875	13.375	1.000	0.875	2.938	2.938	0.250	1.750	3.125	10.625	7.125	1.250	1.125	14.188	17.500	31.688	10.813	14.188	25.000	9.875	12.813	7.125
6	8	10	15.750	13.000	15.375	9.688	13.375	1.000	0.875	2.938	2.938	0.250	1.750	3.125	10.625	7.875	1.250	1.125	14.188	17.500	31.688	10.813	14.188	25.000	12.188	14.375	7.875
10	10	10	15.750	16.563	17.313	12.000	13.375	1.000	0.875	2.938	2.938	0.500	3.750	4.313	14.188	8.250	1.875	1.625	17.500	22.063	39.563	13.625	18.125	31.750	13.375	19.313	8.250
5	6	11	13.813	11.813	13.375	10.063	11.438	1.000	0.875	2.938	2.563	0.250	1.750	3.125	9.438	6.313	1.250	1.125	12.938	16.313	29.250	9.625	12.938	22.563	11.438	12.188	6.313
3	4	12	13.813	11.813	11.000	8.688	11.438	1.000	0.875	2.563	2.563	0.250	1.750	3.125	9.438	5.938	1.250	1.125	12.938	16.313	29.250	9.625	12.938	22.563	10.813	11.438	5.938
4	5	12	13.813	11.813	12.625	9.625	11.438	1.000	0.875	2.563	2.563	0.250	1.750	3.125	9.438	6.688	1.250	1.125	12.938	16.313	29.250	9.625	12.938	22.563	10.813	12.625	6.688
5	6	12	15.750	13.000	13.375	10.000	13.375	1.000	0.875	2.938	2.938	0.250	1.750	3.125	10.625	6.875	1.250	1.125	14.188	17.500	31.688	10.813	14.188	25.000	11.438	13.188	6.875
6	8	12	15.750	16.563	17.313	10.813	13.375	1.000	0.875	2.938	2.938	0.500	3.750	4.313	14.188	9.250	1.875	1.625	15.688	20.250	35.938	11.813	16.375	28.188	12.438	14.375	9.250
8	10	12	20.063	19.688	21.250	12.188	17.750	1.000	0.875	2.938	2.938	0.500	3.750	4.313	17.313	11.250	1.875	1.625	17.500	22.063	39.563	13.625	18.125	31.750	15.188	17.750	11.250
10	10	12	20.063	19.688	21.250	12.563	17.750	1.000	0.875	2.938	2.938	0.500	3.750	4.313	17.313	9.875	1.875	1.625	17.500	22.063	39.563	13.625	18.125	31.750	15.750	16.938	9.875
12	14	14	29.125	19.688	25.625	14.000	24.375	1.000	0.750	4.750	3.938	0.813	3.125	4.125	15.750	13.000	2.750	2.563	19.438	24.250	43.688	19.438	24.250	43.688	17.750	23.625	13.000
2	3	15	15.750	13.000	11.813	10.313	13.375	1.000	0.875	2.563	2.563	0.250	1.750	3.125	10.625	6.688	1.250	1.125	12.938	16.313	29.250	9.625	12.938	22.563	11.063	14.000	6.688
3	4	15	15.750	13.000	12.625	10.938	13.375	1.000	0.875	2.563	2.563	0.250	1.750	3.125	10.625	6.875	1.250	1.125	12.938	16.313	29.250	9.625	12.938	22.563	13.813	13.375	6.875
4	5	15	17.750	13.000	13.375	11.188	15.375	1.000	0.875	2.938	2.938	0.500	3.750	4.313	10.625	7.500	1.875	1.625	15.688	20.250	35.938	11.813	16.375	28.188	13.813	13.375	7.500
5	6	15	17.750	13.000	15.375	11.688	15.375	1.000	0.875	2.938	2.938	0.500	3.750	4.313	10.625	8.250	1.875	1.625	15.688	20.250	35.938	11.813	16.375	28.188	13.813	15.750	8.250
6	8	15	15.750	16.563	17.313	11.313	13.375	1.000	0.875	2.938	2.938	0.500	3.750	4.313	14.188	8.250	1.875	1.625	15.688	20.250	35.938	11.813	16.375	28.188	13.813	16.125	8.250
8	10	15	20.063	16.563	18.125	13.375	17.313	1.125	1.125	3.563	3.563	0.625	4.250	6.000	13.813	8.875	2.438	2.125	18.125	24.313	42.438	14.625	20.813	35.438	16.563	18.875	8.875
10	12	15	22.063	19.688	21.250	15.500	19.313	1.125	1.125	3.563	3.563	0.625	4.250	6.000	16.938	10.438	2.438	2.125	18.125	24.313	42.438	14.625	20.813	35.438	16.563	21.563	10.438
14	14	15	31.500	22.438	27.563	15.750	26.000	1.125	0.875	5.500	4.375	0.875	3.750	4.938	18.125	14.563	3.563	3.375	23.625	29.125	52.750	23.625	29.125	52.750	19.688	27.563	14.563
10	12	16	33.063	22.438	22.813	14.000	27.563	1.125	0.875	5.500	4.375	0.875	3.750	4.938	18.125	12.188	3.563	3.375	23.625	29.125	52.750	23.625	29.125	52.750	21.688	25.625	12.188
4	5	18	17.750	13.000	15.375	11.813	15.375	1.000	0.875	2.938	2.938	0.500	3.750	4.313	10.625	8.250	1.875	1.625	15.688	20.250	35.938	11.813	16.375	28.188	13.813	15.750	8.250
5	8	18	22.063	17.750	19.688	13.875	19.313	1.125	1.125	3.563	3.563	0.625	4.250	6.000	15.375	10.250	2.438	2.125	18.125	24.313	42.438	14.625	20.813	35.438	17.750	18.875	10.250
6	8	18	22.063	17.750	21.250	14.750	19.313	1.125	1.125	3.563	3.563	0.625	4.250	6.000	15.375	10.625	2.438	2.125	18.125	24.313	42.438	14.625	20.813	35.438	17.750	20.063	10.625
8	10	18	22.063	17.750	21.250	14.688	19.313	1.125	1.125	3.563	3.563	0.625	4.250	6.000	15.375	10.625	2.438	2.125	18.125	24.313	42.438	14.625	20.813	35.438	17.750	16.063	10.625
12	14	18	37.000	28.375	25.625	16.125	31.500	1.125	0.875	5.500	4.375	1.000	5.125	5.875	24.000	13.563	3.938	3.750	26.875	33.563	60.438	26.875	33.563	60.438	23.625	26.750	13.563
14	18	18	37.000	29.938	29.500	18.000	31.500	1.125	1.063	5.500	4.375	1.000	5.125	5.938	25.625	15.750	3.938	3.750	26.875	33.563	60.438	26.875	33.563	60.438	23.625	27.563	15.750
10	12	20	33.063	22.438	22.813	15.000	27.563	1.125	0.875	5.500	4.375	0.875	3.750	4.938	18.125	12.188	3.563	3.375	23.625	29.125	52.750	23.625	29.125	52.750	23.625	25.625	12.188
14	18	21	37.000	29.938	29.500	18.000	31.500	1.125	1.063	5.500	4.375	1.000	5.125	5.875	25.625	15.750	3.938	3.750	26.875	33.563	60.438	26.875	33.563	60.438	23.625	27.563	15.750
8	10	22	34.250	19.688	22.063	15.563	29.500	1.000	0.750	4.750	3.938	0.813	3.125	4.125	15.750	13.188	2.750	2.563	19.438	24.250	43.688	19.438	24.250	43.688	21.688	21.688	13.188
12	14	23	33.063	22.438	27.563	17.313	27.563	1.125	0.875	5.500	4.375	0.875	3.750	4.938	18.125	14.563	3.563	3.375	23.625	29.125	52.750	23.625	29.125	52.750	19.688	25.625	14.563
10	12	26	39.375	22.438	27.563	18.875	33.875	1.188	0.875	5.500	4.375	0.875	3.750	4.938	18.125	15.750	3.563	3.375	23.625	29.125	52.750	23.625	29.125	52.750	27.563	27.563	15.750

May 28, 2004

340 SERIES HD

AMERICAN-MARSH PUMPS

A WILO BRAND

DOUBLE SUCTION SPLITCASE PUMP ONLY

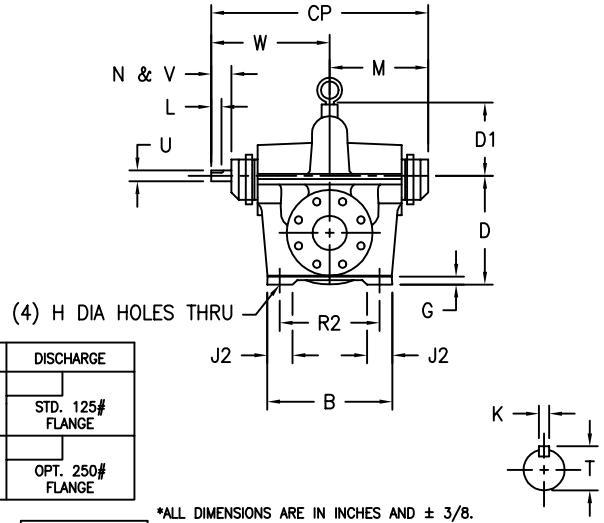

SUCTION	DISCHARGE
STD. 125# FLANGE	STD. 125# FLANGE
OPT. 250# FLANGE	OPT. 250# FLANGE

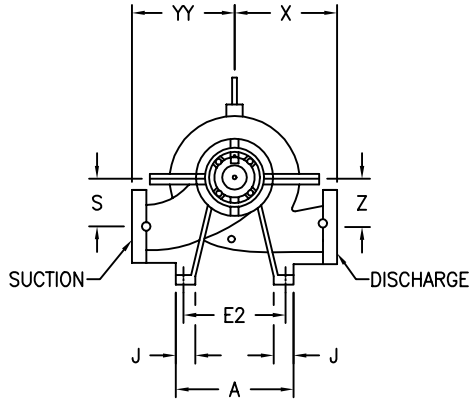

RIGHT HAND ROTATION
(STANDARD)

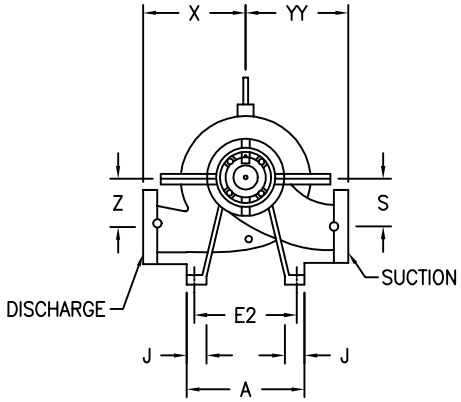

LEFT HAND ROTATION
(NON–STANDARD)

*ALL DIMENSIONS ARE IN INCHES AND ± 3/8.
*NOT FOR CONSTUCTION. UNLESS CERTIFIED BY ENGINEERING.

PUMP SIZE																			PACKED		PACKED	SEALED		SEALED			
DISCH	SUCT	CASE BORE	A	B	D	D1	E2	G	H	J	J2	K	L	N & V	R2	S	T	U	M	W	CP	M	W	CP	X	YY	Z
2 1/2	3	10	13.813	11.813	9.875	7.750	11.438	1.000	0.875	2.563	2.563	0.250	1.750	3.125	9.438	5.125	1.250	1.125	12.938	16.313	29.250	9.625	12.938	22.563	8.875	11.063	5.125
3	4	10	13.813	11.813	11.000	7.625	11.438	1.000	0.875	2.563	2.563	0.250	1.750	3.125	9.438	5.125	1.250	1.125	12.938	16.313	29.250	9.625	12.938	22.563	9.063	10.625	5.125
4	6	10	13.813	11.813	13.375	8.563	11.438	1.000	0.875	2.938	2.938	0.500	3.750	4.313	9.438	6.688	1.875	1.625	15.688	20.250	35.938	11.813	16.375	28.188	9.875	12.188	6.688
5	6	10	15.750	13.000	13.375	8.875	13.375	1.000	0.875	2.938	2.938	0.250	1.750	3.125	10.625	7.125	1.250	1.125	14.188	17.500	31.688	10.813	14.188	25.000	9.875	12.813	7.125
6	8	10	15.750	13.000	15.375	9.688	13.375	1.000	0.875	2.938	2.938	0.250	1.750	3.125	10.625	7.875	1.250	1.125	14.188	17.500	31.688	10.813	14.188	25.000	12.188	14.375	7.875
10	10	10	15.750	16.563	17.313	12.000	13.375	1.000	0.875	2.938	2.938	0.500	3.750	4.313	14.188	8.250	1.875	1.625	17.500	22.063	39.563	13.625	18.125	31.750	13.375	19.313	8.250
5	6	11	13.813	11.813	13.375	10.063	11.438	1.000	0.875	2.938	2.563	0.250	1.750	3.125	9.438	6.313	1.250	1.125	12.938	16.313	29.250	9.625	12.938	22.563	11.438	12.188	6.313
3	4	12	13.813	11.813	11.000	8.688	11.438	1.000	0.875	2.563	2.563	0.250	1.750	3.125	9.438	5.938	1.250	1.125	12.938	16.313	29.250	9.625	12.938	22.563	10.813	11.438	5.938
4	5	12	13.813	11.813	12.625	9.625	11.438	1.000	0.875	2.563	2.563	0.250	1.750	3.125	9.438	6.688	1.250	1.125	12.938	16.313	29.250	9.625	12.938	22.563	10.813	12.625	6.688
5	6	12	15.750	13.000	13.375	10.000	13.375	1.000	0.875	2.938	2.938	0.250	1.750	3.125	10.625	6.875	1.250	1.125	14.188	17.500	31.688	10.813	14.188	25.000	11.438	13.188	6.875
6	8	12	15.750	16.563	17.313	10.813	13.375	1.000	0.875	2.938	2.938	0.500	3.750	4.313	14.188	9.250	1.875	1.625	15.688	20.250	35.938	11.813	16.375	28.188	12.438	14.375	9.250
8	10	12	20.063	19.688	21.250	12.188	17.750	1.000	0.875	2.938	2.938	0.500	3.750	4.313	17.313	11.250	1.875	1.625	17.500	22.063	39.563	13.625	18.125	31.750	15.188	17.750	11.250
10	10	12	20.063	19.688	21.250	12.563	17.750	1.000	0.875	2.938	2.938	0.500	3.750	4.313	17.313	9.875	1.875	1.625	17.500	22.063	39.563	13.625	18.125	31.750	15.750	16.938	9.875
12	14	14	29.125	19.688	25.625	14.000	24.375	1.000	0.750	4.750	3.938	0.813	3.125	4.125	15.750	13.000	2.750	2.563	19.438	24.250	43.688	19.438	24.250	43.688	17.750	23.625	13.000
2	3	15	15.750	13.000	11.813	10.313	13.375	1.000	0.875	2.563	2.563	0.250	1.750	3.125	10.625	6.688	1.250	1.125	12.938	16.313	29.250	9.625	12.938	22.563	11.063	14.000	6.688
3	4	15	15.750	13.000	12.625	10.938	13.375	1.000	0.875	2.563	2.563	0.250	1.750	3.125	10.625	6.875	1.250	1.125	12.938	16.313	29.250	9.625	12.938	22.563	13.813	13.375	6.875
4	5	15	17.750	13.000	13.375	11.188	15.375	1.000	0.875	2.938	2.938	0.500	3.750	4.313	10.625	7.500	1.875	1.625	15.688	20.250	35.938	11.813	16.375	28.188	13.813	13.375	7.500
5	6	15	17.750	13.000	15.375	11.688	15.375	1.000	0.875	2.938	2.938	0.500	3.750	4.313	10.625	8.250	1.875	1.625	15.688	20.250	35.938	11.813	16.375	28.188	13.813	15.750	8.250
6	8	15	15.750	16.563	17.313	11.313	13.375	1.000	0.875	2.938	2.938	0.500	3.750	4.313	14.188	8.250	1.875	1.625	15.688	20.250	35.938	11.813	16.375	28.188	13.813	16.125	8.250
8	10	15	20.063	16.563	18.125	13.375	17.313	1.125	1.125	3.563	3.563	0.625	4.250	6.000	13.813	8.875	2.438	2.125	18.125	24.313	42.438	14.625	20.813	35.438	16.563	18.875	8.875
10	12	15	22.063	19.688	21.250	15.500	19.313	1.125	1.125	3.563	3.563	0.625	4.250	6.000	16.938	10.438	2.438	2.125	18.125	24.313	42.438	14.625	20.813	35.438	16.563	21.563	10.438
14	14	15	31.500	22.438	27.563	15.750	26.000	1.125	0.875	5.500	4.375	0.875	3.750	4.938	18.125	14.563	3.563	3.375	23.625	29.125	52.750	23.625	29.125	52.750	19.688	27.563	14.563
10	12	16	33.063	22.438	22.813	14.000	27.563	1.125	0.875	5.500	4.375	0.875	3.750	4.938	18.125	12.188	3.563	3.375	23.625	29.125	52.750	23.625	29.125	52.750	21.688	25.625	12.188
4	5	18	17.750	13.000	15.375	11.813	15.375	1.000	0.875	2.938	2.938	0.500	3.750	4.313	10.625	8.250	1.875	1.625	15.688	20.250	35.938	11.813	16.375	28.188	13.813	15.750	8.250
5	8	18	22.063	17.750	19.688	13.875	19.313	1.125	1.125	3.563	3.563	0.625	4.250	6.000	15.375	10.250	2.438	2.125	18.125	24.313	42.438	14.625	20.813	35.438	17.750	18.875	10.250
6	8	18	22.063	17.750	21.250	14.750	19.313	1.125	1.125	3.563	3.563	0.625	4.250	6.000	15.375	10.625	2.438	2.125	18.125	24.313	42.438	14.625	20.813	35.438	17.750	20.063	10.625
8	10	18	22.063	17.750	21.250	14.688	19.313	1.125	1.125	3.563	3.563	0.625	4.250	6.000	15.375	10.625	2.438	2.125	18.125	24.313	42.438	14.625	20.813	35.438	17.750	16.063	10.625
12	14	18	37.000	28.375	25.625	16.125	31.500	1.125	0.875	5.500	4.375	1.000	5.125	5.875	24.000	13.563	3.938	3.750	26.875	33.563	60.438	26.875	33.563	60.438	23.625	26.750	13.563
14	18	18	37.000	29.938	29.500	18.000	31.500	1.125	1.063	5.500	4.375	1.000	5.125	5.938	25.625	15.750	3.938	3.750	26.875	33.563	60.438	26.875	33.563	60.438	23.625	27.563	15.750
10	12	20	33.063	22.438	22.813	15.000	27.563	1.125	0.875	5.500	4.375	0.875	3.750	4.938	18.125	12.188	3.563	3.375	23.625	29.125	52.750	23.625	29.125	52.750	23.625	25.625	12.188
14	18	21	37.000	29.938	29.500	18.000	31.500	1.125	1.063	5.500	4.375	1.000	5.125	5.875	25.625	15.750	3.938	3.750	26.875	33.563	60.438	26.875	33.563	60.438	23.625	27.563	15.750
8	10	22	34.250	19.688	22.063	15.563	29.500	1.000	0.750	4.750	3.938	0.813	3.125	4.125	15.750	13.188	2.750	2.563	19.438	24.250	43.688	19.438	24.250	43.688	21.688	21.688	13.188
12	14	23	33.063	22.438	27.563	17.313	27.563	1.125	0.875	5.500	4.375	0.875	3.750	4.938	18.125	14.563	3.563	3.375	23.625	29.125	52.750	23.625	29.125	52.750	19.688	25.625	14.563
10	12	26	39.375	22.438	27.563	18.875	33.875	1.188	0.875	5.500	4.375	0.875	3.750	4.938	18.125	15.750	3.563	3.375	23.625	29.125	52.750	23.625	29.125	52.750	27.563	27.563	15.750

May 28, 2004

340 SERIES HD

AMERICAN-MARSH PUMPS

A WILO BRAND

DOUBLE SUCTION SPLITCASE PUMP ONLY

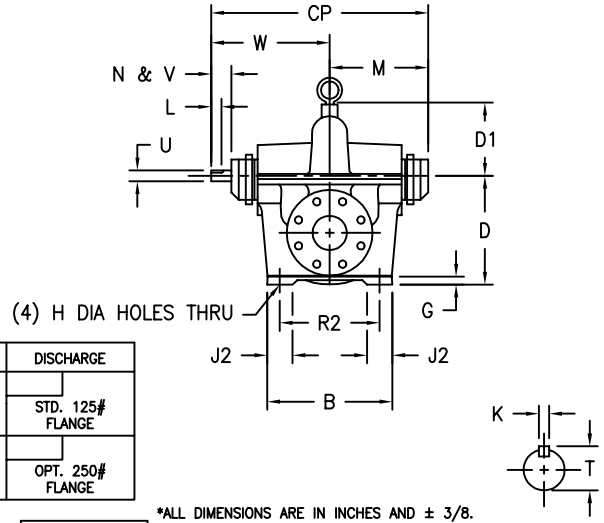

SUCTION	DISCHARGE
STD. 125# FLANGE	STD. 125# FLANGE
OPT. 250# FLANGE	OPT. 250# FLANGE

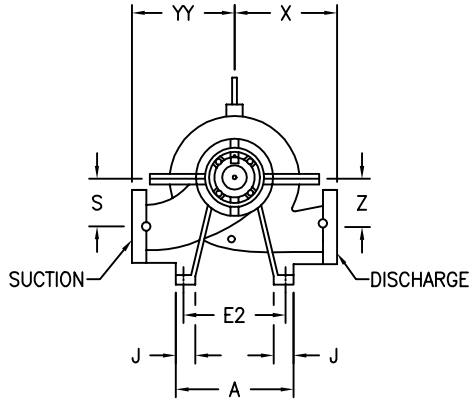

RIGHT HAND ROTATION
(STANDARD)

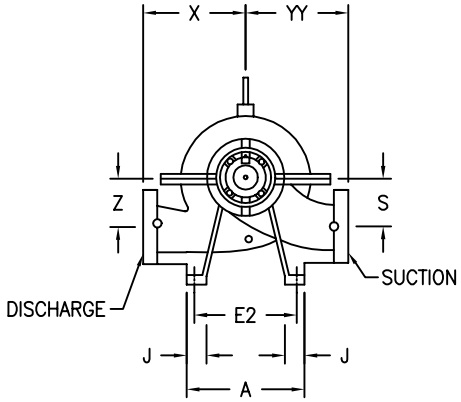

LEFT HAND ROTATION
(NON–STANDARD)

*ALL DIMENSIONS ARE IN INCHES AND ± 3/8.
*NOT FOR CONSTUCTION. UNLESS CERTIFIED BY ENGINEERING.

PUMP SIZE																			PACKED		PACKED	SEALED		SEALED			
DISCH	SUCT	CASE BORE	A	B	D	D1	E2	G	H	J	J2	K	L	N & V	R2	S	T	U	M	W	CP	M	W	CP	X	YY	Z
2 1/2	3	10	13.813	11.813	9.875	7.750	11.438	1.000	0.875	2.563	2.563	0.250	1.750	3.125	9.438	5.125	1.250	1.125	12.938	16.313	29.250	9.625	12.938	22.563	8.875	11.063	5.125
3	4	10	13.813	11.813	11.000	7.625	11.438	1.000	0.875	2.563	2.563	0.250	1.750	3.125	9.438	5.125	1.250	1.125	12.938	16.313	29.250	9.625	12.938	22.563	9.063	10.625	5.125
4	6	10	13.813	11.813	13.375	8.563	11.438	1.000	0.875	2.938	2.938	0.500	3.750	4.313	9.438	6.688	1.875	1.625	15.688	20.250	35.938	11.813	16.375	28.188	9.875	12.188	6.688
5	6	10	15.750	13.000	13.375	8.875	13.375	1.000	0.875	2.938	2.938	0.250	1.750	3.125	10.625	7.125	1.250	1.125	14.188	17.500	31.688	10.813	14.188	25.000	9.875	12.813	7.125
6	8	10	15.750	13.000	15.375	9.688	13.375	1.000	0.875	2.938	2.938	0.250	1.750	3.125	10.625	7.875	1.250	1.125	14.188	17.500	31.688	10.813	14.188	25.000	12.188	14.375	7.875
10	10	10	15.750	16.563	17.313	12.000	13.375	1.000	0.875	2.938	2.938	0.500	3.750	4.313	14.188	8.250	1.875	1.625	17.500	22.063	39.563	13.625	18.125	31.750	13.375	19.313	8.250
5	6	11	13.813	11.813	13.375	10.063	11.438	1.000	0.875	2.938	2.563	0.250	1.750	3.125	9.438	6.313	1.250	1.125	12.938	16.313	29.250	9.625	12.938	22.563	11.438	12.188	6.313
3	4	12	13.813	11.813	11.000	8.688	11.438	1.000	0.875	2.563	2.563	0.250	1.750	3.125	9.438	5.938	1.250	1.125	12.938	16.313	29.250	9.625	12.938	22.563	10.813	11.438	5.938
4	5	12	13.813	11.813	12.625	9.625	11.438	1.000	0.875	2.563	2.563	0.250	1.750	3.125	9.438	6.688	1.250	1.125	12.938	16.313	29.250	9.625	12.938	22.563	10.813	12.625	6.688
5	6	12	15.750	13.000	13.375	10.000	13.375	1.000	0.875	2.938	2.938	0.250	1.750	3.125	10.625	6.875	1.250	1.125	14.188	17.500	31.688	10.813	14.188	25.000	11.438	13.188	6.875
6	8	12	15.750	16.563	17.313	10.813	13.375	1.000	0.875	2.938	2.938	0.500	3.750	4.313	14.188	9.250	1.875	1.625	15.688	20.250	35.938	11.813	16.375	28.188	12.438	14.375	9.250
8	10	12	20.063	19.688	21.250	12.188	17.750	1.000	0.875	2.938	2.938	0.500	3.750	4.313	17.313	11.250	1.875	1.625	17.500	22.063	39.563	13.625	18.125	31.750	15.188	17.750	11.250
10	10	12	20.063	19.688	21.250	12.563	17.750	1.000	0.875	2.938	2.938	0.500	3.750	4.313	17.313	9.875	1.875	1.625	17.500	22.063	39.563	13.625	18.125	31.750	15.750	16.938	9.875
12	14	14	29.125	19.688	25.625	14.000	24.375	1.000	0.750	4.750	3.938	0.813	3.125	4.125	15.750	13.000	2.750	2.563	19.438	24.250	43.688	19.438	24.250	43.688	17.750	23.625	13.000
2	3	15	15.750	13.000	11.813	10.313	13.375	1.000	0.875	2.563	2.563	0.250	1.750	3.125	10.625	6.688	1.250	1.125	12.938	16.313	29.250	9.625	12.938	22.563	11.063	14.000	6.688
3	4	15	15.750	13.000	12.625	10.938	13.375	1.000	0.875	2.563	2.563	0.250	1.750	3.125	10.625	6.875	1.250	1.125	12.938	16.313	29.250	9.625	12.938	22.563	13.813	13.375	6.875
4	5	15	17.750	13.000	13.375	11.188	15.375	1.000	0.875	2.938	2.938	0.500	3.750	4.313	10.625	7.500	1.875	1.625	15.688	20.250	35.938	11.813	16.375	28.188	13.813	13.375	7.500
5	6	15	17.750	13.000	15.375	11.688	15.375	1.000	0.875	2.938	2.938	0.500	3.750	4.313	10.625	8.250	1.875	1.625	15.688	20.250	35.938	11.813	16.375	28.188	13.813	15.750	8.250
6	8	15	15.750	16.563	17.313	11.313	13.375	1.000	0.875	2.938	2.938	0.500	3.750	4.313	14.188	8.250	1.875	1.625	15.688	20.250	35.938	11.813	16.375	28.188	13.813	16.125	8.250
8	10	15	20.063	16.563	18.125	13.375	17.313	1.125	1.125	3.563	3.563	0.625	4.250	6.000	13.813	8.875	2.438	2.125	18.125	24.313	42.438	14.625	20.813	35.438	16.563	18.875	8.875
10	12	15	22.063	19.688	21.250	15.500	19.313	1.125	1.125	3.563	3.563	0.625	4.250	6.000	16.938	10.438	2.438	2.125	18.125	24.313	42.438	14.625	20.813	35.438	16.563	21.563	10.438
14	14	15	31.500	22.438	27.563	15.750	26.000	1.125	0.875	5.500	4.375	0.875	3.750	4.938	18.125	14.563	3.563	3.375	23.625	29.125	52.750	23.625	29.125	52.750	19.688	27.563	14.563
10	12	16	33.063	22.438	22.813	14.000	27.563	1.125	0.875	5.500	4.375	0.875	3.750	4.938	18.125	12.188	3.563	3.375	23.625	29.125	52.750	23.625	29.125	52.750	21.688	25.625	12.188
4	5	18	17.750	13.000	15.375	11.813	15.375	1.000	0.875	2.938	2.938	0.500	3.750	4.313	10.625	8.250	1.875	1.625	15.688	20.250	35.938	11.813	16.375	28.188	13.813	15.750	8.250
5	8	18	22.063	17.750	19.688	13.875	19.313	1.125	1.125	3.563	3.563	0.625	4.250	6.000	15.375	10.250	2.438	2.125	18.125	24.313	42.438	14.625	20.813	35.438	17.750	18.875	10.250
6	8	18	22.063	17.750	21.250	14.750	19.313	1.125	1.125	3.563	3.563	0.625	4.250	6.000	15.375	10.625	2.438	2.125	18.125	24.313	42.438	14.625	20.813	35.438	17.750	20.063	10.625
8	10	18	22.063	17.750	21.250	14.688	19.313	1.125	1.125	3.563	3.563	0.625	4.250	6.000	15.375	10.625	2.438	2.125	18.125	24.313	42.438	14.625	20.813	35.438	17.750	16.063	10.625
12	14	18	37.000	28.375	25.625	16.125	31.500	1.125	0.875	5.500	4.375	1.000	5.125	5.875	24.000	13.563	3.938	3.750	26.875	33.563	60.438	26.875	33.563	60.438	23.625	26.750	13.563
14	18	18	37.000	29.938	29.500	18.000	31.500	1.125	1.063	5.500	4.375	1.000	5.125	5.938	25.625	15.750	3.938	3.750	26.875	33.563	60.438	26.875	33.563	60.438	23.625	27.563	15.750
10	12	20	33.063	22.438	22.813	15.000	27.563	1.125	0.875	5.500	4.375	0.875	3.750	4.938	18.125	12.188	3.563	3.375	23.625	29.125	52.750	23.625	29.125	52.750	23.625	25.625	12.188
14	18	21	37.000	29.938	29.500	18.000	31.500	1.125	1.063	5.500	4.375	1.000	5.125	5.875	25.625	15.750	3.938	3.750	26.875	33.563	60.438	26.875	33.563	60.438	23.625	27.563	15.750
8	10	22	34.250	19.688	22.063	15.563	29.500	1.000	0.750	4.750	3.938	0.813	3.125	4.125	15.750	13.188	2.750	2.563	19.438	24.250	43.688	19.438	24.250	43.688	21.688	21.688	13.188
12	14	23	33.063	22.438	27.563	17.313	27.563	1.125	0.875	5.500	4.375	0.875	3.750	4.938	18.125	14.563	3.563	3.375	23.625	29.125	52.750	23.625	29.125	52.750	19.688	25.625	14.563
10	12	26	39.375	22.438	27.563	18.875	33.875	1.188	0.875	5.500	4.375	0.875	3.750	4.938	18.125	15.750	3.563	3.375	23.625	29.125	52.750	23.625	29.125	52.750	27.563	27.563	15.750

May 28, 2004

340 SERIES HD

AMERICAN-MARSH PUMPS

A WILO BRAND

DOUBLE SUCTION SPLITCASE PUMP ONLY

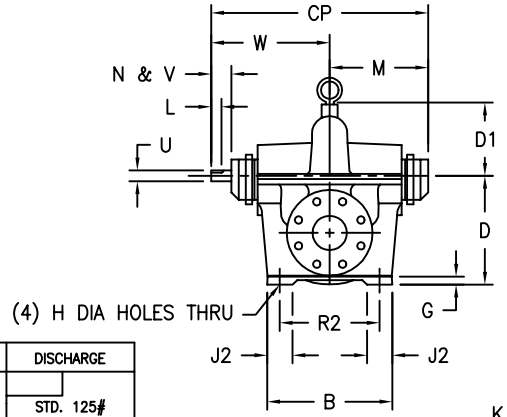

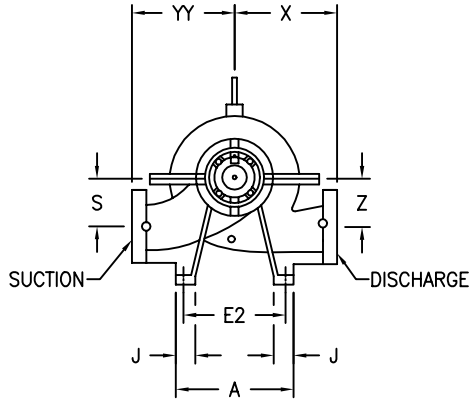

RIGHT HAND ROTATION
(STANDARD)

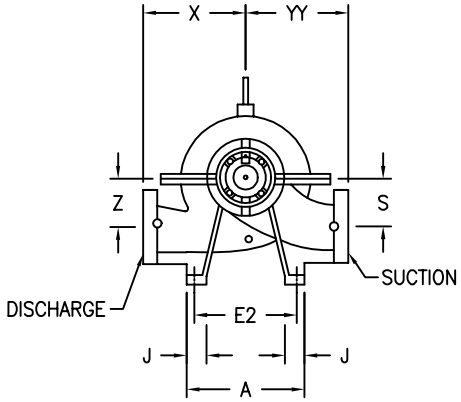

LEFT HAND ROTATION
(NON–STANDARD)

SUCTION	DISCHARGE
STD. 125# FLANGE	STD. 125# FLANGE
OPT. 250# FLANGE	OPT. 250# FLANGE

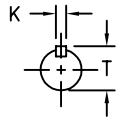

*ALL DIMENSIONS ARE IN INCHES AND ± 3/8.
*NOT FOR CONSTUCTION. UNLESS CERTIFIED BY ENGINEERING.

PUMP SIZE																			PACKED		PACKED	SEALED		SEALED			
DISCH	SUCT	CASE BORE	A	B	D	D1	E2	G	H	J	J2	K	L	N & V	R2	S	T	U	M	W	CP	M	W	CP	X	YY	Z
2 1/2	3	10	13.813	11.813	9.875	7.750	11.438	1.000	0.875	2.563	2.563	0.250	1.750	3.125	9.438	5.125	1.250	1.125	12.938	16.313	29.250	9.625	12.938	22.563	8.875	11.063	5.125
3	4	10	13.813	11.813	11.000	7.625	11.438	1.000	0.875	2.563	2.563	0.250	1.750	3.125	9.438	5.125	1.250	1.125	12.938	16.313	29.250	9.625	12.938	22.563	9.063	10.625	5.125
4	6	10	13.813	11.813	13.375	8.563	11.438	1.000	0.875	2.938	2.938	0.500	3.750	4.313	9.438	6.688	1.875	1.625	15.688	20.250	35.938	11.813	16.375	28.188	9.875	12.188	6.688
5	6	10	15.750	13.000	13.375	8.875	13.375	1.000	0.875	2.938	2.938	0.250	1.750	3.125	10.625	7.125	1.250	1.125	14.188	17.500	31.688	10.813	14.188	25.000	9.875	12.813	7.125
6	8	10	15.750	13.000	15.375	9.688	13.375	1.000	0.875	2.938	2.938	0.250	1.750	3.125	10.625	7.875	1.250	1.125	14.188	17.500	31.688	10.813	14.188	25.000	12.188	14.375	7.875
10	10	10	15.750	16.563	17.313	12.000	13.375	1.000	0.875	2.938	2.938	0.500	3.750	4.313	14.188	8.250	1.875	1.625	17.500	22.063	39.563	13.625	18.125	31.750	13.375	19.313	8.250
5	6	11	13.813	11.813	13.375	10.063	11.438	1.000	0.875	2.938	2.563	0.250	1.750	3.125	9.438	6.313	1.250	1.125	12.938	16.313	29.250	9.625	12.938	22.563	11.438	12.188	6.313
3	4	12	13.813	11.813	11.000	8.688	11.438	1.000	0.875	2.563	2.563	0.250	1.750	3.125	9.438	5.938	1.250	1.125	12.938	16.313	29.250	9.625	12.938	22.563	10.813	11.438	5.938
4	5	12	13.813	11.813	12.625	9.625	11.438	1.000	0.875	2.563	2.563	0.250	1.750	3.125	9.438	6.688	1.250	1.125	12.938	16.313	29.250	9.625	12.938	22.563	10.813	12.625	6.688
5	6	12	15.750	13.000	13.375	10.000	13.375	1.000	0.875	2.938	2.938	0.250	1.750	3.125	10.625	6.875	1.250	1.125	14.188	17.500	31.688	10.813	14.188	25.000	11.438	13.188	6.875
6	8	12	15.750	16.563	17.313	10.813	13.375	1.000	0.875	2.938	2.938	0.500	3.750	4.313	14.188	9.250	1.875	1.625	15.688	20.250	35.938	11.813	16.375	28.188	12.438	14.375	9.250
8	10	12	20.063	19.688	21.250	12.188	17.750	1.000	0.875	2.938	2.938	0.500	3.750	4.313	17.313	11.250	1.875	1.625	17.500	22.063	39.563	13.625	18.125	31.750	15.188	17.750	11.250
10	10	12	20.063	19.688	21.250	12.563	17.750	1.000	0.875	2.938	2.938	0.500	3.750	4.313	17.313	9.875	1.875	1.625	17.500	22.063	39.563	13.625	18.125	31.750	15.750	16.938	9.875
12	14	14	29.125	19.688	25.625	14.000	24.375	1.000	0.750	4.750	3.938	0.813	3.125	4.125	15.750	13.000	2.750	2.563	19.438	24.250	43.688	19.438	24.250	43.688	17.750	23.625	13.000
2	3	15	15.750	13.000	11.813	10.313	13.375	1.000	0.875	2.563	2.563	0.250	1.750	3.125	10.625	6.688	1.250	1.125	12.938	16.313	29.250	9.625	12.938	22.563	11.063	14.000	6.688
3	4	15	15.750	13.000	12.625	10.938	13.375	1.000	0.875	2.563	2.563	0.250	1.750	3.125	10.625	6.875	1.250	1.125	12.938	16.313	29.250	9.625	12.938	22.563	13.813	13.375	6.875
4	5	15	17.750	13.000	13.375	11.188	15.375	1.000	0.875	2.938	2.938	0.500	3.750	4.313	10.625	7.500	1.875	1.625	15.688	20.250	35.938	11.813	16.375	28.188	13.813	13.375	7.500
5	6	15	17.750	13.000	15.375	11.688	15.375	1.000	0.875	2.938	2.938	0.500	3.750	4.313	10.625	8.250	1.875	1.625	15.688	20.250	35.938	11.813	16.375	28.188	13.813	15.750	8.250
6	8	15	15.750	16.563	17.313	11.313	13.375	1.000	0.875	2.938	2.938	0.500	3.750	4.313	14.188	8.250	1.875	1.625	15.688	20.250	35.938	11.813	16.375	28.188	13.813	16.125	8.250
8	10	15	20.063	16.563	18.125	13.375	17.313	1.125	1.125	3.563	3.563	0.625	4.250	6.000	13.813	8.875	2.438	2.125	18.125	24.313	42.438	14.625	20.813	35.438	16.563	18.875	8.875
10	12	15	22.063	19.688	21.250	15.500	19.313	1.125	1.125	3.563	3.563	0.625	4.250	6.000	16.938	10.438	2.438	2.125	18.125	24.313	42.438	14.625	20.813	35.438	16.563	21.563	10.438
14	14	15	31.500	22.438	27.563	15.750	26.000	1.125	0.875	5.500	4.375	0.875	3.750	4.938	18.125	14.563	3.563	3.375	23.625	29.125	52.750	23.625	29.125	52.750	19.688	27.563	14.563
10	12	16	33.063	22.438	22.813	14.000	27.563	1.125	0.875	5.500	4.375	0.875	3.750	4.938	18.125	12.188	3.563	3.375	23.625	29.125	52.750	23.625	29.125	52.750	21.688	25.625	12.188
4	5	18	17.750	13.000	15.375	11.813	15.375	1.000	0.875	2.938	2.938	0.500	3.750	4.313	10.625	8.250	1.875	1.625	15.688	20.250	35.938	11.813	16.375	28.188	13.813	15.750	8.250
5	8	18	22.063	17.750	19.688	13.875	19.313	1.125	1.125	3.563	3.563	0.625	4.250	6.000	15.375	10.250	2.438	2.125	18.125	24.313	42.438	14.625	20.813	35.438	17.750	18.875	10.250
6	8	18	22.063	17.750	21.250	14.750	19.313	1.125	1.125	3.563	3.563	0.625	4.250	6.000	15.375	10.625	2.438	2.125	18.125	24.313	42.438	14.625	20.813	35.438	17.750	20.063	10.625
8	10	18	22.063	17.750	21.250	14.688	19.313	1.125	1.125	3.563	3.563	0.625	4.250	6.000	15.375	10.625	2.438	2.125	18.125	24.313	42.438	14.625	20.813	35.438	17.750	16.063	10.625
12	14	18	37.000	28.375	25.625	16.125	31.500	1.125	0.875	5.500	4.375	1.000	5.125	5.875	24.000	13.563	3.938	3.750	26.875	33.563	60.438	26.875	33.563	60.438	23.625	26.750	13.563
14	18	18	37.000	29.938	29.500	18.000	31.500	1.125	1.063	5.500	4.375	1.000	5.125	5.938	25.625	15.750	3.938	3.750	26.875	33.563	60.438	26.875	33.563	60.438	23.625	27.563	15.750
10	12	20	33.063	22.438	22.813	15.000	27.563	1.125	0.875	5.500	4.375	0.875	3.750	4.938	18.125	12.188	3.563	3.375	23.625	29.125	52.750	23.625	29.125	52.750	23.625	25.625	12.188
14	18	21	37.000	29.938	29.500	18.000	31.500	1.125	1.063	5.500	4.375	1.000	5.125	5.875	25.625	15.750	3.938	3.750	26.875	33.563	60.438	26.875	33.563	60.438	23.625	27.563	15.750
8	10	22	34.250	19.688	22.063	15.563	29.500	1.000	0.750	4.750	3.938	0.813	3.125	4.125	15.750	13.188	2.750	2.563	19.438	24.250	43.688	19.438	24.250	43.688	21.688	21.688	13.188
12	14	23	33.063	22.438	27.563	17.313	27.563	1.125	0.875	5.500	4.375	0.875	3.750	4.938	18.125	14.563	3.563	3.375	23.625	29.125	52.750	23.625	29.125	52.750	19.688	25.625	14.563
10	12	26	39.375	22.438	27.563	18.875	33.875	1.188	0.875	5.500	4.375	0.875	3.750	4.938	18.125	15.750	3.563	3.375	23.625	29.125	52.750	23.625	29.125	52.750	27.563	27.563	15.750

May 28, 2004

340 SERIES HD

AMERICAN-MARSH PUMPS

A WILO BRAND

DOUBLE SUCTION SPLITCASE PUMP ONLY

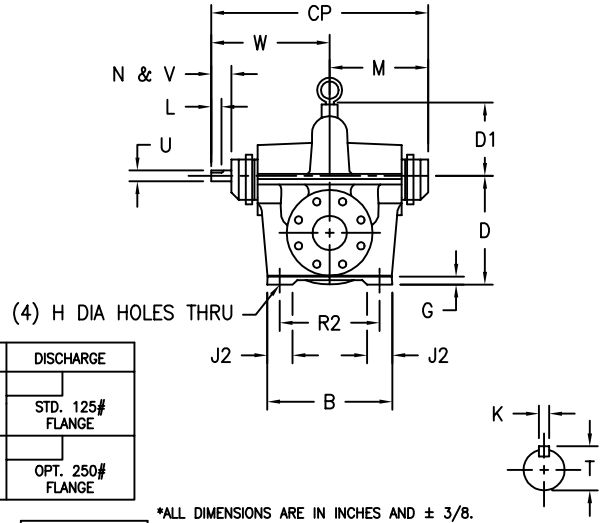

SUCTION	DISCHARGE
STD. 125# FLANGE	STD. 125# FLANGE
OPT. 250# FLANGE	OPT. 250# FLANGE

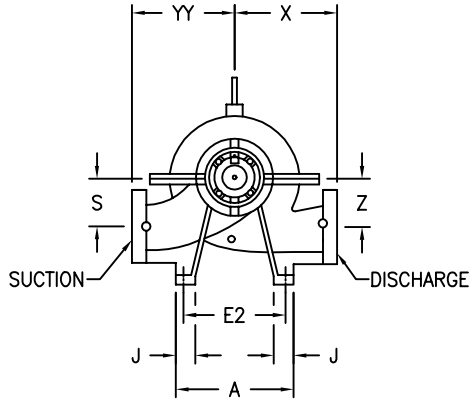

RIGHT HAND ROTATION
(STANDARD)

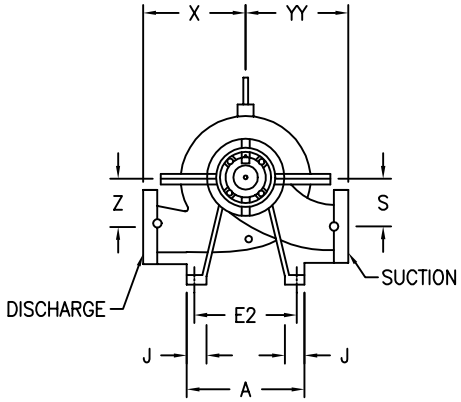

LEFT HAND ROTATION
(NON–STANDARD)

*ALL DIMENSIONS ARE IN INCHES AND ± 3/8.
*NOT FOR CONSTUCTION. UNLESS CERTIFIED BY ENGINEERING.

PUMP SIZE																			PACKED		PACKED	SEALED		SEALED			
DISCH	SUCT	CASE BORE	A	B	D	D1	E2	G	H	J	J2	K	L	N & V	R2	S	T	U	M	W	CP	M	W	CP	X	YY	Z
2 1/2	3	10	13.813	11.813	9.875	7.750	11.438	1.000	0.875	2.563	2.563	0.250	1.750	3.125	9.438	5.125	1.250	1.125	12.938	16.313	29.250	9.625	12.938	22.563	8.875	11.063	5.125
3	4	10	13.813	11.813	11.000	7.625	11.438	1.000	0.875	2.563	2.563	0.250	1.750	3.125	9.438	5.125	1.250	1.125	12.938	16.313	29.250	9.625	12.938	22.563	9.063	10.625	5.125
4	6	10	13.813	11.813	13.375	8.563	11.438	1.000	0.875	2.938	2.938	0.500	3.750	4.313	9.438	6.688	1.875	1.625	15.688	20.250	35.938	11.813	16.375	28.188	9.875	12.188	6.688
5	6	10	15.750	13.000	13.375	8.875	13.375	1.000	0.875	2.938	2.938	0.250	1.750	3.125	10.625	7.125	1.250	1.125	14.188	17.500	31.688	10.813	14.188	25.000	9.875	12.813	7.125
6	8	10	15.750	13.000	15.375	9.688	13.375	1.000	0.875	2.938	2.938	0.250	1.750	3.125	10.625	7.875	1.250	1.125	14.188	17.500	31.688	10.813	14.188	25.000	12.188	14.375	7.875
10	10	10	15.750	16.563	17.313	12.000	13.375	1.000	0.875	2.938	2.938	0.500	3.750	4.313	14.188	8.250	1.875	1.625	17.500	22.063	39.563	13.625	18.125	31.750	13.375	19.313	8.250
5	6	11	13.813	11.813	13.375	10.063	11.438	1.000	0.875	2.938	2.563	0.250	1.750	3.125	9.438	6.313	1.250	1.125	12.938	16.313	29.250	9.625	12.938	22.563	11.438	12.188	6.313
3	4	12	13.813	11.813	11.000	8.688	11.438	1.000	0.875	2.563	2.563	0.250	1.750	3.125	9.438	5.938	1.250	1.125	12.938	16.313	29.250	9.625	12.938	22.563	10.813	11.438	5.938
4	5	12	13.813	11.813	12.625	9.625	11.438	1.000	0.875	2.563	2.563	0.250	1.750	3.125	9.438	6.688	1.250	1.125	12.938	16.313	29.250	9.625	12.938	22.563	10.813	12.625	6.688
5	6	12	15.750	13.000	13.375	10.000	13.375	1.000	0.875	2.938	2.938	0.250	1.750	3.125	10.625	6.875	1.250	1.125	14.188	17.500	31.688	10.813	14.188	25.000	11.438	13.188	6.875
6	8	12	15.750	16.563	17.313	10.813	13.375	1.000	0.875	2.938	2.938	0.500	3.750	4.313	14.188	9.250	1.875	1.625	15.688	20.250	35.938	11.813	16.375	28.188	12.438	14.375	9.250
8	10	12	20.063	19.688	21.250	12.188	17.750	1.000	0.875	2.938	2.938	0.500	3.750	4.313	17.313	11.250	1.875	1.625	17.500	22.063	39.563	13.625	18.125	31.750	15.188	17.750	11.250
10	10	12	20.063	19.688	21.250	12.563	17.750	1.000	0.875	2.938	2.938	0.500	3.750	4.313	17.313	9.875	1.875	1.625	17.500	22.063	39.563	13.625	18.125	31.750	15.750	16.938	9.875
12	14	14	29.125	19.688	25.625	14.000	24.375	1.000	0.750	4.750	3.938	0.813	3.125	4.125	15.750	13.000	2.750	2.563	19.438	24.250	43.688	19.438	24.250	43.688	17.750	23.625	13.000
2	3	15	15.750	13.000	11.813	10.313	13.375	1.000	0.875	2.563	2.563	0.250	1.750	3.125	10.625	6.688	1.250	1.125	12.938	16.313	29.250	9.625	12.938	22.563	11.063	14.000	6.688
3	4	15	15.750	13.000	12.625	10.938	13.375	1.000	0.875	2.563	2.563	0.250	1.750	3.125	10.625	6.875	1.250	1.125	12.938	16.313	29.250	9.625	12.938	22.563	13.813	13.375	6.875
4	5	15	17.750	13.000	13.375	11.188	15.375	1.000	0.875	2.938	2.938	0.500	3.750	4.313	10.625	7.500	1.875	1.625	15.688	20.250	35.938	11.813	16.375	28.188	13.813	13.375	7.500
5	6	15	17.750	13.000	15.375	11.688	15.375	1.000	0.875	2.938	2.938	0.500	3.750	4.313	10.625	8.250	1.875	1.625	15.688	20.250	35.938	11.813	16.375	28.188	13.813	15.750	8.250
6	8	15	15.750	16.563	17.313	11.313	13.375	1.000	0.875	2.938	2.938	0.500	3.750	4.313	14.188	8.250	1.875	1.625	15.688	20.250	35.938	11.813	16.375	28.188	13.813	16.125	8.250
8	10	15	20.063	16.563	18.125	13.375	17.313	1.125	1.125	3.563	3.563	0.625	4.250	6.000	13.813	8.875	2.438	2.125	18.125	24.313	42.438	14.625	20.813	35.438	16.563	18.875	8.875
10	12	15	22.063	19.688	21.250	15.500	19.313	1.125	1.125	3.563	3.563	0.625	4.250	6.000	16.938	10.438	2.438	2.125	18.125	24.313	42.438	14.625	20.813	35.438	16.563	21.563	10.438
14	14	15	31.500	22.438	27.563	15.750	26.000	1.125	0.875	5.500	4.375	0.875	3.750	4.938	18.125	14.563	3.563	3.375	23.625	29.125	52.750	23.625	29.125	52.750	19.688	27.563	14.563
10	12	16	33.063	22.438	22.813	14.000	27.563	1.125	0.875	5.500	4.375	0.875	3.750	4.938	18.125	12.188	3.563	3.375	23.625	29.125	52.750	23.625	29.125	52.750	21.688	25.625	12.188
4	5	18	17.750	13.000	15.375	11.813	15.375	1.000	0.875	2.938	2.938	0.500	3.750	4.313	10.625	8.250	1.875	1.625	15.688	20.250	35.938	11.813	16.375	28.188	13.813	15.750	8.250
5	8	18	22.063	17.750	19.688	13.875	19.313	1.125	1.125	3.563	3.563	0.625	4.250	6.000	15.375	10.250	2.438	2.125	18.125	24.313	42.438	14.625	20.813	35.438	17.750	18.875	10.250
6	8	18	22.063	17.750	21.250	14.750	19.313	1.125	1.125	3.563	3.563	0.625	4.250	6.000	15.375	10.625	2.438	2.125	18.125	24.313	42.438	14.625	20.813	35.438	17.750	20.063	10.625
8	10	18	22.063	17.750	21.250	14.688	19.313	1.125	1.125	3.563	3.563	0.625	4.250	6.000	15.375	10.625	2.438	2.125	18.125	24.313	42.438	14.625	20.813	35.438	17.750	16.063	10.625
12	14	18	37.000	28.375	25.625	16.125	31.500	1.125	0.875	5.500	4.375	1.000	5.125	5.875	24.000	13.563	3.938	3.750	26.875	33.563	60.438	26.875	33.563	60.438	23.625	26.750	13.563
14	18	18	37.000	29.938	29.500	18.000	31.500	1.125	1.063	5.500	4.375	1.000	5.125	5.938	25.625	15.750	3.938	3.750	26.875	33.563	60.438	26.875	33.563	60.438	23.625	27.563	15.750
10	12	20	33.063	22.438	22.813	15.000	27.563	1.125	0.875	5.500	4.375	0.875	3.750	4.938	18.125	12.188	3.563	3.375	23.625	29.125	52.750	23.625	29.125	52.750	23.625	25.625	12.188
14	18	21	37.000	29.938	29.500	18.000	31.500	1.125	1.063	5.500	4.375	1.000	5.125	5.875	25.625	15.750	3.938	3.750	26.875	33.563	60.438	26.875	33.563	60.438	23.625	27.563	15.750
8	10	22	34.250	19.688	22.063	15.563	29.500	1.000	0.750	4.750	3.938	0.813	3.125	4.125	15.750	13.188	2.750	2.563	19.438	24.250	43.688	19.438	24.250	43.688	21.688	21.688	13.188
12	14	23	33.063	22.438	27.563	17.313	27.563	1.125	0.875	5.500	4.375	0.875	3.750	4.938	18.125	14.563	3.563	3.375	23.625	29.125	52.750	23.625	29.125	52.750	19.688	25.625	14.563
10	12	26	39.375	22.438	27.563	18.875	33.875	1.188	0.875	5.500	4.375	0.875	3.750	4.938	18.125	15.750	3.563	3.375	23.625	29.125	52.750	23.625	29.125	52.750	27.563	27.563	15.750

May 28, 2004

340 SERIES HD

AMERICAN-MARSH PUMPS

A WILO BRAND

DOUBLE SUCTION SPLITCASE PUMP ONLY

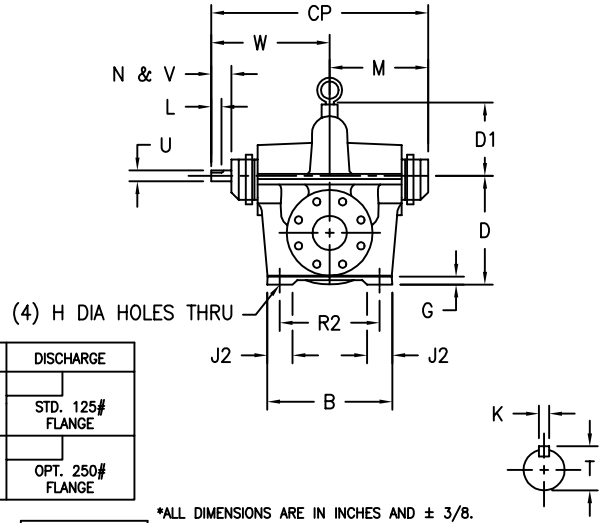

SUCTION	DISCHARGE
STD. 125# FLANGE	STD. 125# FLANGE
OPT. 250# FLANGE	OPT. 250# FLANGE

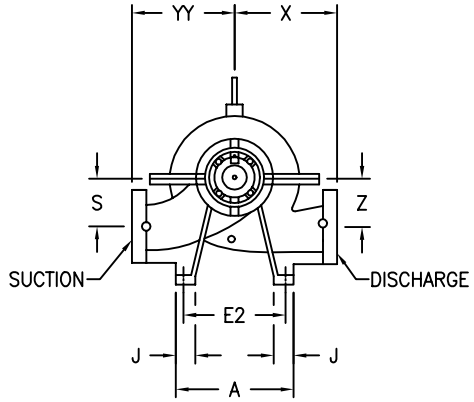

RIGHT HAND ROTATION
(STANDARD)

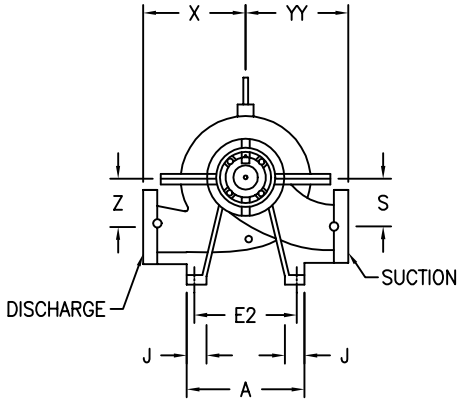

LEFT HAND ROTATION
(NON–STANDARD)

*ALL DIMENSIONS ARE IN INCHES AND ± 3/8.
*NOT FOR CONSTUCTION. UNLESS CERTIFIED BY ENGINEERING.

PUMP SIZE																			PACKED		PACKED	SEALED		SEALED			
DISCH	SUCT	CASE BORE	A	B	D	D1	E2	G	H	J	J2	K	L	N & V	R2	S	T	U	M	W	CP	M	W	CP	X	YY	Z
2 1/2	3	10	13.813	11.813	9.875	7.750	11.438	1.000	0.875	2.563	2.563	0.250	1.750	3.125	9.438	5.125	1.250	1.125	12.938	16.313	29.250	9.625	12.938	22.563	8.875	11.063	5.125
3	4	10	13.813	11.813	11.000	7.625	11.438	1.000	0.875	2.563	2.563	0.250	1.750	3.125	9.438	5.125	1.250	1.125	12.938	16.313	29.250	9.625	12.938	22.563	9.063	10.625	5.125
4	6	10	13.813	11.813	13.375	8.563	11.438	1.000	0.875	2.938	2.938	0.500	3.750	4.313	9.438	6.688	1.875	1.625	15.688	20.250	35.938	11.813	16.375	28.188	9.875	12.188	6.688
5	6	10	15.750	13.000	13.375	8.875	13.375	1.000	0.875	2.938	2.938	0.250	1.750	3.125	10.625	7.125	1.250	1.125	14.188	17.500	31.688	10.813	14.188	25.000	9.875	12.813	7.125
6	8	10	15.750	13.000	15.375	9.688	13.375	1.000	0.875	2.938	2.938	0.250	1.750	3.125	10.625	7.875	1.250	1.125	14.188	17.500	31.688	10.813	14.188	25.000	12.188	14.375	7.875
10	10	10	15.750	16.563	17.313	12.000	13.375	1.000	0.875	2.938	2.938	0.500	3.750	4.313	14.188	8.250	1.875	1.625	17.500	22.063	39.563	13.625	18.125	31.750	13.375	19.313	8.250
5	6	11	13.813	11.813	13.375	10.063	11.438	1.000	0.875	2.938	2.563	0.250	1.750	3.125	9.438	6.313	1.250	1.125	12.938	16.313	29.250	9.625	12.938	22.563	11.438	12.188	6.313
3	4	12	13.813	11.813	11.000	8.688	11.438	1.000	0.875	2.563	2.563	0.250	1.750	3.125	9.438	5.938	1.250	1.125	12.938	16.313	29.250	9.625	12.938	22.563	10.813	11.438	5.938
4	5	12	13.813	11.813	12.625	9.625	11.438	1.000	0.875	2.563	2.563	0.250	1.750	3.125	9.438	6.688	1.250	1.125	12.938	16.313	29.250	9.625	12.938	22.563	10.813	12.625	6.688
5	6	12	15.750	13.000	13.375	10.000	13.375	1.000	0.875	2.938	2.938	0.250	1.750	3.125	10.625	6.875	1.250	1.125	14.188	17.500	31.688	10.813	14.188	25.000	11.438	13.188	6.875
6	8	12	15.750	16.563	17.313	10.813	13.375	1.000	0.875	2.938	2.938	0.500	3.750	4.313	14.188	9.250	1.875	1.625	15.688	20.250	35.938	11.813	16.375	28.188	12.438	14.375	9.250
8	10	12	20.063	19.688	21.250	12.188	17.750	1.000	0.875	2.938	2.938	0.500	3.750	4.313	17.313	11.250	1.875	1.625	17.500	22.063	39.563	13.625	18.125	31.750	15.188	17.750	11.250
10	10	12	20.063	19.688	21.250	12.563	17.750	1.000	0.875	2.938	2.938	0.500	3.750	4.313	17.313	9.875	1.875	1.625	17.500	22.063	39.563	13.625	18.125	31.750	15.750	16.938	9.875
12	14	14	29.125	19.688	25.625	14.000	24.375	1.000	0.750	4.750	3.938	0.813	3.125	4.125	15.750	13.000	2.750	2.563	19.438	24.250	43.688	19.438	24.250	43.688	17.750	23.625	13.000
2	3	15	15.750	13.000	11.813	10.313	13.375	1.000	0.875	2.563	2.563	0.250	1.750	3.125	10.625	6.688	1.250	1.125	12.938	16.313	29.250	9.625	12.938	22.563	11.063	14.000	6.688
3	4	15	15.750	13.000	12.625	10.938	13.375	1.000	0.875	2.563	2.563	0.250	1.750	3.125	10.625	6.875	1.250	1.125	12.938	16.313	29.250	9.625	12.938	22.563	13.813	13.375	6.875
4	5	15	17.750	13.000	13.375	11.188	15.375	1.000	0.875	2.938	2.938	0.500	3.750	4.313	10.625	7.500	1.875	1.625	15.688	20.250	35.938	11.813	16.375	28.188	13.813	13.375	7.500
5	6	15	17.750	13.000	15.375	11.688	15.375	1.000	0.875	2.938	2.938	0.500	3.750	4.313	10.625	8.250	1.875	1.625	15.688	20.250	35.938	11.813	16.375	28.188	13.813	15.750	8.250
6	8	15	15.750	16.563	17.313	11.313	13.375	1.000	0.875	2.938	2.938	0.500	3.750	4.313	14.188	8.250	1.875	1.625	15.688	20.250	35.938	11.813	16.375	28.188	13.813	16.125	8.250
8	10	15	20.063	16.563	18.125	13.375	17.313	1.125	1.125	3.563	3.563	0.625	4.250	6.000	13.813	8.875	2.438	2.125	18.125	24.313	42.438	14.625	20.813	35.438	16.563	18.875	8.875
10	12	15	22.063	19.688	21.250	15.500	19.313	1.125	1.125	3.563	3.563	0.625	4.250	6.000	16.938	10.438	2.438	2.125	18.125	24.313	42.438	14.625	20.813	35.438	16.563	21.563	10.438
14	14	15	31.500	22.438	27.563	15.750	26.000	1.125	0.875	5.500	4.375	0.875	3.750	4.938	18.125	14.563	3.563	3.375	23.625	29.125	52.750	23.625	29.125	52.750	19.688	27.563	14.563
10	12	16	33.063	22.438	22.813	14.000	27.563	1.125	0.875	5.500	4.375	0.875	3.750	4.938	18.125	12.188	3.563	3.375	23.625	29.125	52.750	23.625	29.125	52.750	21.688	25.625	12.188
4	5	18	17.750	13.000	15.375	11.813	15.375	1.000	0.875	2.938	2.938	0.500	3.750	4.313	10.625	8.250	1.875	1.625	15.688	20.250	35.938	11.813	16.375	28.188	13.813	15.750	8.250
5	8	18	22.063	17.750	19.688	13.875	19.313	1.125	1.125	3.563	3.563	0.625	4.250	6.000	15.375	10.250	2.438	2.125	18.125	24.313	42.438	14.625	20.813	35.438	17.750	18.875	10.250
6	8	18	22.063	17.750	21.250	14.750	19.313	1.125	1.125	3.563	3.563	0.625	4.250	6.000	15.375	10.625	2.438	2.125	18.125	24.313	42.438	14.625	20.813	35.438	17.750	20.063	10.625
8	10	18	22.063	17.750	21.250	14.688	19.313	1.125	1.125	3.563	3.563	0.625	4.250	6.000	15.375	10.625	2.438	2.125	18.125	24.313	42.438	14.625	20.813	35.438	17.750	16.063	10.625
12	14	18	37.000	28.375	25.625	16.125	31.500	1.125	0.875	5.500	4.375	1.000	5.125	5.875	24.000	13.563	3.938	3.750	26.875	33.563	60.438	26.875	33.563	60.438	23.625	26.750	13.563
14	18	18	37.000	29.938	29.500	18.000	31.500	1.125	1.063	5.500	4.375	1.000	5.125	5.938	25.625	15.750	3.938	3.750	26.875	33.563	60.438	26.875	33.563	60.438	23.625	27.563	15.750
10	12	20	33.063	22.438	22.813	15.000	27.563	1.125	0.875	5.500	4.375	0.875	3.750	4.938	18.125	12.188	3.563	3.375	23.625	29.125	52.750	23.625	29.125	52.750	23.625	25.625	12.188
14	18	21	37.000	29.938	29.500	18.000	31.500	1.125	1.063	5.500	4.375	1.000	5.125	5.875	25.625	15.750	3.938	3.750	26.875	33.563	60.438	26.875	33.563	60.438	23.625	27.563	15.750
8	10	22	34.250	19.688	22.063	15.563	29.500	1.000	0.750	4.750	3.938	0.813	3.125	4.125	15.750	13.188	2.750	2.563	19.438	24.250	43.688	19.438	24.250	43.688	21.688	21.688	13.188
12	14	23	33.063	22.438	27.563	17.313	27.563	1.125	0.875	5.500	4.375	0.875	3.750	4.938	18.125	14.563	3.563	3.375	23.625	29.125	52.750	23.625	29.125	52.750	19.688	25.625	14.563
10	12	26	39.375	22.438	27.563	18.875	33.875	1.188	0.875	5.500	4.375	0.875	3.750	4.938	18.125	15.750	3.563	3.375	23.625	29.125	52.750	23.625	29.125	52.750	27.563	27.563	15.750

May 28, 2004

340 SERIES HD

AMERICAN-MARSH PUMPS

A WILO BRAND

DOUBLE SUCTION SPLITCASE PUMP ONLY

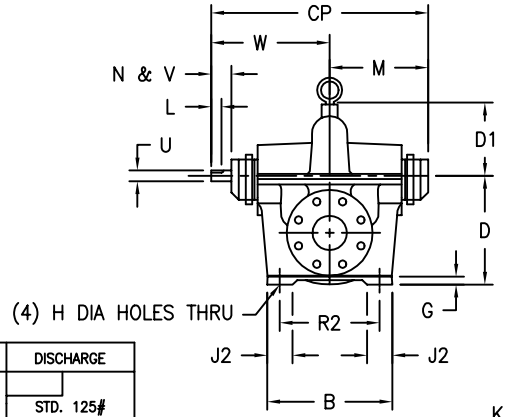

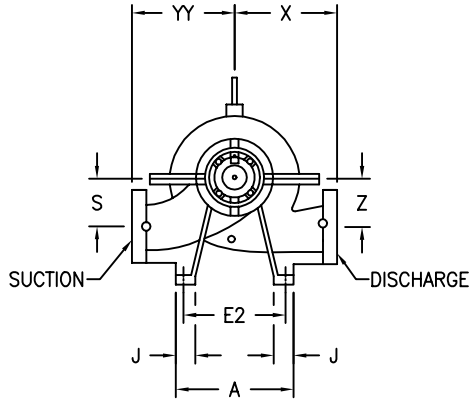

RIGHT HAND ROTATION
(STANDARD)

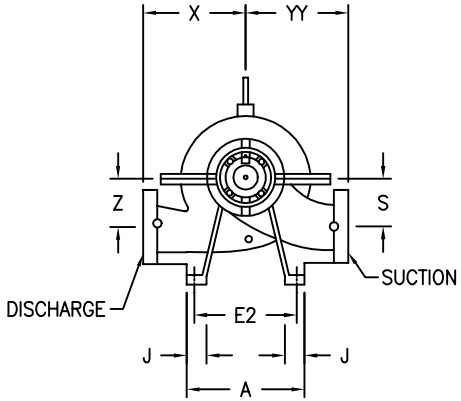

LEFT HAND ROTATION
(NON–STANDARD)

SUCTION	DISCHARGE
STD. 125# FLANGE	STD. 125# FLANGE
OPT. 250# FLANGE	OPT. 250# FLANGE

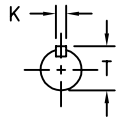

*ALL DIMENSIONS ARE IN INCHES AND ± 3/8.
*NOT FOR CONSTUCTION. UNLESS CERTIFIED BY ENGINEERING.

PUMP SIZE																			PACKED		PACKED	SEALED		SEALED			
DISCH	SUCT	CASE BORE	A	B	D	D1	E2	G	H	J	J2	K	L	N & V	R2	S	T	U	M	W	CP	M	W	CP	X	YY	Z
2 1/2	3	10	13.813	11.813	9.875	7.750	11.438	1.000	0.875	2.563	2.563	0.250	1.750	3.125	9.438	5.125	1.250	1.125	12.938	16.313	29.250	9.625	12.938	22.563	8.875	11.063	5.125
3	4	10	13.813	11.813	11.000	7.625	11.438	1.000	0.875	2.563	2.563	0.250	1.750	3.125	9.438	5.125	1.250	1.125	12.938	16.313	29.250	9.625	12.938	22.563	9.063	10.625	5.125
4	6	10	13.813	11.813	13.375	8.563	11.438	1.000	0.875	2.938	2.938	0.500	3.750	4.313	9.438	6.688	1.875	1.625	15.688	20.250	35.938	11.813	16.375	28.188	9.875	12.188	6.688
5	6	10	15.750	13.000	13.375	8.875	13.375	1.000	0.875	2.938	2.938	0.250	1.750	3.125	10.625	7.125	1.250	1.125	14.188	17.500	31.688	10.813	14.188	25.000	9.875	12.813	7.125
6	8	10	15.750	13.000	15.375	9.688	13.375	1.000	0.875	2.938	2.938	0.250	1.750	3.125	10.625	7.875	1.250	1.125	14.188	17.500	31.688	10.813	14.188	25.000	12.188	14.375	7.875
10	10	10	15.750	16.563	17.313	12.000	13.375	1.000	0.875	2.938	2.938	0.500	3.750	4.313	14.188	8.250	1.875	1.625	17.500	22.063	39.563	13.625	18.125	31.750	13.375	19.313	8.250
5	6	11	13.813	11.813	13.375	10.063	11.438	1.000	0.875	2.938	2.563	0.250	1.750	3.125	9.438	6.313	1.250	1.125	12.938	16.313	29.250	9.625	12.938	22.563	11.438	12.188	6.313
3	4	12	13.813	11.813	11.000	8.688	11.438	1.000	0.875	2.563	2.563	0.250	1.750	3.125	9.438	5.938	1.250	1.125	12.938	16.313	29.250	9.625	12.938	22.563	10.813	11.438	5.938
4	5	12	13.813	11.813	12.625	9.625	11.438	1.000	0.875	2.563	2.563	0.250	1.750	3.125	9.438	6.688	1.250	1.125	12.938	16.313	29.250	9.625	12.938	22.563	10.813	12.625	6.688
5	6	12	15.750	13.000	13.375	10.000	13.375	1.000	0.875	2.938	2.938	0.250	1.750	3.125	10.625	6.875	1.250	1.125	14.188	17.500	31.688	10.813	14.188	25.000	11.438	13.188	6.875
6	8	12	15.750	16.563	17.313	10.813	13.375	1.000	0.875	2.938	2.938	0.500	3.750	4.313	14.188	9.250	1.875	1.625	15.688	20.250	35.938	11.813	16.375	28.188	12.438	14.375	9.250
8	10	12	20.063	19.688	21.250	12.188	17.750	1.000	0.875	2.938	2.938	0.500	3.750	4.313	17.313	11.250	1.875	1.625	17.500	22.063	39.563	13.625	18.125	31.750	15.188	17.750	11.250
10	10	12	20.063	19.688	21.250	12.563	17.750	1.000	0.875	2.938	2.938	0.500	3.750	4.313	17.313	9.875	1.875	1.625	17.500	22.063	39.563	13.625	18.125	31.750	15.750	16.938	9.875
12	14	14	29.125	19.688	25.625	14.000	24.375	1.000	0.750	4.750	3.938	0.813	3.125	4.125	15.750	13.000	2.750	2.563	19.438	24.250	43.688	19.438	24.250	43.688	17.750	23.625	13.000
2	3	15	15.750	13.000	11.813	10.313	13.375	1.000	0.875	2.563	2.563	0.250	1.750	3.125	10.625	6.688	1.250	1.125	12.938	16.313	29.250	9.625	12.938	22.563	11.063	14.000	6.688
3	4	15	15.750	13.000	12.625	10.938	13.375	1.000	0.875	2.563	2.563	0.250	1.750	3.125	10.625	6.875	1.250	1.125	12.938	16.313	29.250	9.625	12.938	22.563	13.813	13.375	6.875
4	5	15	17.750	13.000	13.375	11.188	15.375	1.000	0.875	2.938	2.938	0.500	3.750	4.313	10.625	7.500	1.875	1.625	15.688	20.250	35.938	11.813	16.375	28.188	13.813	13.375	7.500
5	6	15	17.750	13.000	15.375	11.688	15.375	1.000	0.875	2.938	2.938	0.500	3.750	4.313	10.625	8.250	1.875	1.625	15.688	20.250	35.938	11.813	16.375	28.188	13.813	15.750	8.250
6	8	15	15.750	16.563	17.313	11.313	13.375	1.000	0.875	2.938	2.938	0.500	3.750	4.313	14.188	8.250	1.875	1.625	15.688	20.250	35.938	11.813	16.375	28.188	13.813	16.125	8.250
8	10	15	20.063	16.563	18.125	13.375	17.313	1.125	1.125	3.563	3.563	0.625	4.250	6.000	13.813	8.875	2.438	2.125	18.125	24.313	42.438	14.625	20.813	35.438	16.563	18.875	8.875
10	12	15	22.063	19.688	21.250	15.500	19.313	1.125	1.125	3.563	3.563	0.625	4.250	6.000	16.938	10.438	2.438	2.125	18.125	24.313	42.438	14.625	20.813	35.438	16.563	21.563	10.438
14	14	15	31.500	22.438	27.563	15.750	26.000	1.125	0.875	5.500	4.375	0.875	3.750	4.938	18.125	14.563	3.563	3.375	23.625	29.125	52.750	23.625	29.125	52.750	19.688	27.563	14.563
10	12	16	33.063	22.438	22.813	14.000	27.563	1.125	0.875	5.500	4.375	0.875	3.750	4.938	18.125	12.188	3.563	3.375	23.625	29.125	52.750	23.625	29.125	52.750	21.688	25.625	12.188
4	5	18	17.750	13.000	15.375	11.813	15.375	1.000	0.875	2.938	2.938	0.500	3.750	4.313	10.625	8.250	1.875	1.625	15.688	20.250	35.938	11.813	16.375	28.188	13.813	15.750	8.250
5	8	18	22.063	17.750	19.688	13.875	19.313	1.125	1.125	3.563	3.563	0.625	4.250	6.000	15.375	10.250	2.438	2.125	18.125	24.313	42.438	14.625	20.813	35.438	17.750	18.875	10.250
6	8	18	22.063	17.750	21.250	14.750	19.313	1.125	1.125	3.563	3.563	0.625	4.250	6.000	15.375	10.625	2.438	2.125	18.125	24.313	42.438	14.625	20.813	35.438	17.750	20.063	10.625
8	10	18	22.063	17.750	21.250	14.688	19.313	1.125	1.125	3.563	3.563	0.625	4.250	6.000	15.375	10.625	2.438	2.125	18.125	24.313	42.438	14.625	20.813	35.438	17.750	16.063	10.625
12	14	18	37.000	28.375	25.625	16.125	31.500	1.125	0.875	5.500	4.375	1.000	5.125	5.875	24.000	13.563	3.938	3.750	26.875	33.563	60.438	26.875	33.563	60.438	23.625	26.750	13.563
14	18	18	37.000	29.938	29.500	18.000	31.500	1.125	1.063	5.500	4.375	1.000	5.125	5.938	25.625	15.750	3.938	3.750	26.875	33.563	60.438	26.875	33.563	60.438	23.625	27.563	15.750
10	12	20	33.063	22.438	22.813	15.000	27.563	1.125	0.875	5.500	4.375	0.875	3.750	4.938	18.125	12.188	3.563	3.375	23.625	29.125	52.750	23.625	29.125	52.750	23.625	25.625	12.188
14	18	21	37.000	29.938	29.500	18.000	31.500	1.125	1.063	5.500	4.375	1.000	5.125	5.875	25.625	15.750	3.938	3.750	26.875	33.563	60.438	26.875	33.563	60.438	23.625	27.563	15.750
8	10	22	34.250	19.688	22.063	15.563	29.500	1.000	0.750	4.750	3.938	0.813	3.125	4.125	15.750	13.188	2.750	2.563	19.438	24.250	43.688	19.438	24.250	43.688	21.688	21.688	13.188
12	14	23	33.063	22.438	27.563	17.313	27.563	1.125	0.875	5.500	4.375	0.875	3.750	4.938	18.125	14.563	3.563	3.375	23.625	29.125	52.750	23.625	29.125	52.750	19.688	25.625	14.563
10	12	26	39.375	22.438	27.563	18.875	33.875	1.188	0.875	5.500	4.375	0.875	3.750	4.938	18.125	15.750	3.563	3.375	23.625	29.125	52.750	23.625	29.125	52.750	27.563	27.563	15.750

May 28, 2004

340 SERIES HD

AMERICAN-MARSH PUMPS

A WILO BRAND

DOUBLE SUCTION SPLITCASE PUMP ONLY

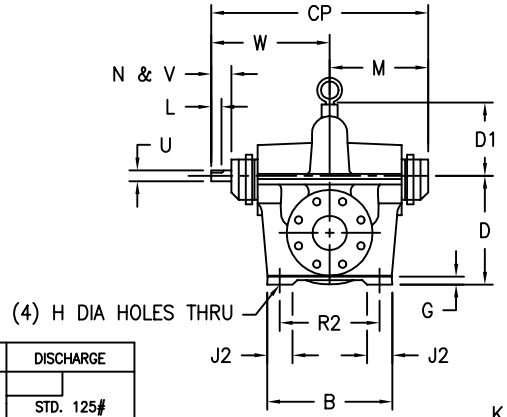

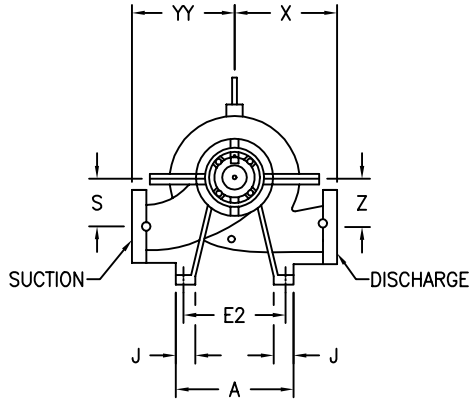

RIGHT HAND ROTATION
(STANDARD)

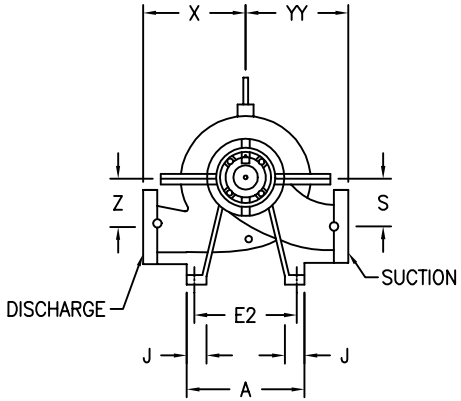

LEFT HAND ROTATION
(NON–STANDARD)

SUCTION	DISCHARGE
STD. 125# FLANGE	STD. 125# FLANGE
OPT. 250# FLANGE	OPT. 250# FLANGE

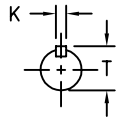

*ALL DIMENSIONS ARE IN INCHES AND ± 3/8.
*NOT FOR CONSTUCTION. UNLESS CERTIFIED BY ENGINEERING.

PUMP SIZE																			PACKED		PACKED	SEALED		SEALED			
DISCH	SUCT	CASE BORE	A	B	D	D1	E2	G	H	J	J2	K	L	N & V	R2	S	T	U	M	W	CP	M	W	CP	X	YY	Z
2 1/2	3	10	13.813	11.813	9.875	7.750	11.438	1.000	0.875	2.563	2.563	0.250	1.750	3.125	9.438	5.125	1.250	1.125	12.938	16.313	29.250	9.625	12.938	22.563	8.875	11.063	5.125
3	4	10	13.813	11.813	11.000	7.625	11.438	1.000	0.875	2.563	2.563	0.250	1.750	3.125	9.438	5.125	1.250	1.125	12.938	16.313	29.250	9.625	12.938	22.563	9.063	10.625	5.125
4	6	10	13.813	11.813	13.375	8.563	11.438	1.000	0.875	2.938	2.938	0.500	3.750	4.313	9.438	6.688	1.875	1.625	15.688	20.250	35.938	11.813	16.375	28.188	9.875	12.188	6.688
5	6	10	15.750	13.000	13.375	8.875	13.375	1.000	0.875	2.938	2.938	0.250	1.750	3.125	10.625	7.125	1.250	1.125	14.188	17.500	31.688	10.813	14.188	25.000	9.875	12.813	7.125
6	8	10	15.750	13.000	15.375	9.688	13.375	1.000	0.875	2.938	2.938	0.250	1.750	3.125	10.625	7.875	1.250	1.125	14.188	17.500	31.688	10.813	14.188	25.000	12.188	14.375	7.875
10	10	10	15.750	16.563	17.313	12.000	13.375	1.000	0.875	2.938	2.938	0.500	3.750	4.313	14.188	8.250	1.875	1.625	17.500	22.063	39.563	13.625	18.125	31.750	13.375	19.313	8.250
5	6	11	13.813	11.813	13.375	10.063	11.438	1.000	0.875	2.938	2.563	0.250	1.750	3.125	9.438	6.313	1.250	1.125	12.938	16.313	29.250	9.625	12.938	22.563	11.438	12.188	6.313
3	4	12	13.813	11.813	11.000	8.688	11.438	1.000	0.875	2.563	2.563	0.250	1.750	3.125	9.438	5.938	1.250	1.125	12.938	16.313	29.250	9.625	12.938	22.563	10.813	11.438	5.938
4	5	12	13.813	11.813	12.625	9.625	11.438	1.000	0.875	2.563	2.563	0.250	1.750	3.125	9.438	6.688	1.250	1.125	12.938	16.313	29.250	9.625	12.938	22.563	10.813	12.625	6.688
5	6	12	15.750	13.000	13.375	10.000	13.375	1.000	0.875	2.938	2.938	0.250	1.750	3.125	10.625	6.875	1.250	1.125	14.188	17.500	31.688	10.813	14.188	25.000	11.438	13.188	6.875
6	8	12	15.750	16.563	17.313	10.813	13.375	1.000	0.875	2.938	2.938	0.500	3.750	4.313	14.188	9.250	1.875	1.625	15.688	20.250	35.938	11.813	16.375	28.188	12.438	14.375	9.250
8	10	12	20.063	19.688	21.250	12.188	17.750	1.000	0.875	2.938	2.938	0.500	3.750	4.313	17.313	11.250	1.875	1.625	17.500	22.063	39.563	13.625	18.125	31.750	15.188	17.750	11.250
10	10	12	20.063	19.688	21.250	12.563	17.750	1.000	0.875	2.938	2.938	0.500	3.750	4.313	17.313	9.875	1.875	1.625	17.500	22.063	39.563	13.625	18.125	31.750	15.750	16.938	9.875
12	14	14	29.125	19.688	25.625	14.000	24.375	1.000	0.750	4.750	3.938	0.813	3.125	4.125	15.750	13.000	2.750	2.563	19.438	24.250	43.688	19.438	24.250	43.688	17.750	23.625	13.000
2	3	15	15.750	13.000	11.813	10.313	13.375	1.000	0.875	2.563	2.563	0.250	1.750	3.125	10.625	6.688	1.250	1.125	12.938	16.313	29.250	9.625	12.938	22.563	11.063	14.000	6.688
3	4	15	15.750	13.000	12.625	10.938	13.375	1.000	0.875	2.563	2.563	0.250	1.750	3.125	10.625	6.875	1.250	1.125	12.938	16.313	29.250	9.625	12.938	22.563	13.813	13.375	6.875
4	5	15	17.750	13.000	13.375	11.188	15.375	1.000	0.875	2.938	2.938	0.500	3.750	4.313	10.625	7.500	1.875	1.625	15.688	20.250	35.938	11.813	16.375	28.188	13.813	13.375	7.500
5	6	15	17.750	13.000	15.375	11.688	15.375	1.000	0.875	2.938	2.938	0.500	3.750	4.313	10.625	8.250	1.875	1.625	15.688	20.250	35.938	11.813	16.375	28.188	13.813	15.750	8.250
6	8	15	15.750	16.563	17.313	11.313	13.375	1.000	0.875	2.938	2.938	0.500	3.750	4.313	14.188	8.250	1.875	1.625	15.688	20.250	35.938	11.813	16.375	28.188	13.813	16.125	8.250
8	10	15	20.063	16.563	18.125	13.375	17.313	1.125	1.125	3.563	3.563	0.625	4.250	6.000	13.813	8.875	2.438	2.125	18.125	24.313	42.438	14.625	20.813	35.438	16.563	18.875	8.875
10	12	15	22.063	19.688	21.250	15.500	19.313	1.125	1.125	3.563	3.563	0.625	4.250	6.000	16.938	10.438	2.438	2.125	18.125	24.313	42.438	14.625	20.813	35.438	16.563	21.563	10.438
14	14	15	31.500	22.438	27.563	15.750	26.000	1.125	0.875	5.500	4.375	0.875	3.750	4.938	18.125	14.563	3.563	3.375	23.625	29.125	52.750	23.625	29.125	52.750	19.688	27.563	14.563
10	12	16	33.063	22.438	22.813	14.000	27.563	1.125	0.875	5.500	4.375	0.875	3.750	4.938	18.125	12.188	3.563	3.375	23.625	29.125	52.750	23.625	29.125	52.750	21.688	25.625	12.188
4	5	18	17.750	13.000	15.375	11.813	15.375	1.000	0.875	2.938	2.938	0.500	3.750	4.313	10.625	8.250	1.875	1.625	15.688	20.250	35.938	11.813	16.375	28.188	13.813	15.750	8.250
5	8	18	22.063	17.750	19.688	13.875	19.313	1.125	1.125	3.563	3.563	0.625	4.250	6.000	15.375	10.250	2.438	2.125	18.125	24.313	42.438	14.625	20.813	35.438	17.750	18.875	10.250
6	8	18	22.063	17.750	21.250	14.750	19.313	1.125	1.125	3.563	3.563	0.625	4.250	6.000	15.375	10.625	2.438	2.125	18.125	24.313	42.438	14.625	20.813	35.438	17.750	20.063	10.625
8	10	18	22.063	17.750	21.250	14.688	19.313	1.125	1.125	3.563	3.563	0.625	4.250	6.000	15.375	10.625	2.438	2.125	18.125	24.313	42.438	14.625	20.813	35.438	17.750	16.063	10.625
12	14	18	37.000	28.375	25.625	16.125	31.500	1.125	0.875	5.500	4.375	1.000	5.125	5.875	24.000	13.563	3.938	3.750	26.875	33.563	60.438	26.875	33.563	60.438	23.625	26.750	13.563
14	18	18	37.000	29.938	29.500	18.000	31.500	1.125	1.063	5.500	4.375	1.000	5.125	5.938	25.625	15.750	3.938	3.750	26.875	33.563	60.438	26.875	33.563	60.438	23.625	27.563	15.750
10	12	20	33.063	22.438	22.813	15.000	27.563	1.125	0.875	5.500	4.375	0.875	3.750	4.938	18.125	12.188	3.563	3.375	23.625	29.125	52.750	23.625	29.125	52.750	23.625	25.625	12.188
14	18	21	37.000	29.938	29.500	18.000	31.500	1.125	1.063	5.500	4.375	1.000	5.125	5.875	25.625	15.750	3.938	3.750	26.875	33.563	60.438	26.875	33.563	60.438	23.625	27.563	15.750
8	10	22	34.250	19.688	22.063	15.563	29.500	1.000	0.750	4.750	3.938	0.813	3.125	4.125	15.750	13.188	2.750	2.563	19.438	24.250	43.688	19.438	24.250	43.688	21.688	21.688	13.188
12	14	23	33.063	22.438	27.563	17.313	27.563	1.125	0.875	5.500	4.375	0.875	3.750	4.938	18.125	14.563	3.563	3.375	23.625	29.125	52.750	23.625	29.125	52.750	19.688	25.625	14.563
10	12	26	39.375	22.438	27.563	18.875	33.875	1.188	0.875	5.500	4.375	0.875	3.750	4.938	18.125	15.750	3.563	3.375	23.625	29.125	52.750	23.625	29.125	52.750	27.563	27.563	15.750

May 28, 2004

340 SERIES HD

AMERICAN-MARSH PUMPS

A WILO BRAND

DOUBLE SUCTION SPLITCASE PUMP ONLY

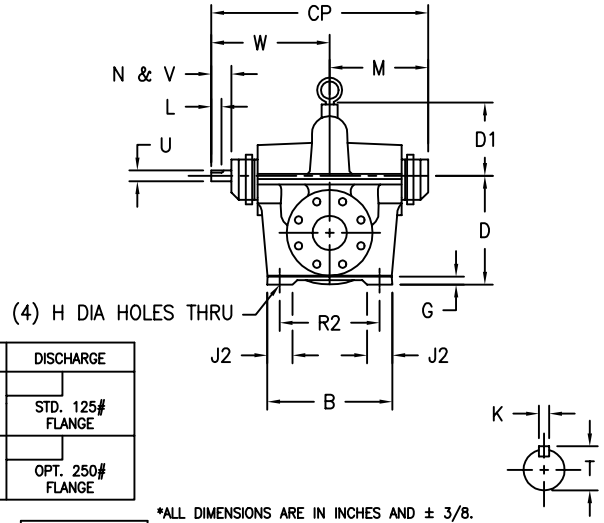

SUCTION	DISCHARGE
STD. 125# FLANGE	STD. 125# FLANGE
OPT. 250# FLANGE	OPT. 250# FLANGE

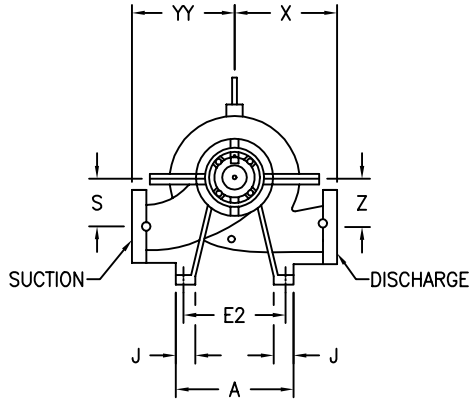

RIGHT HAND ROTATION
(STANDARD)

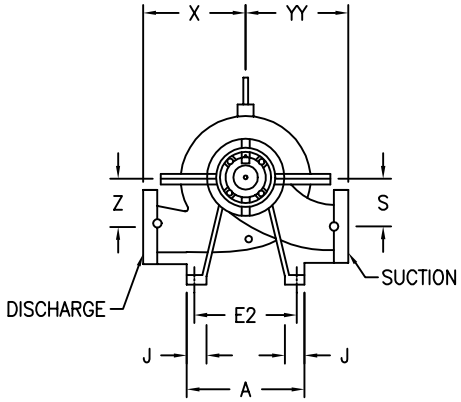

LEFT HAND ROTATION
(NON–STANDARD)

*ALL DIMENSIONS ARE IN INCHES AND ± 3/8.
*NOT FOR CONSTUCTION. UNLESS CERTIFIED BY ENGINEERING.

PUMP SIZE																			PACKED		PACKED	SEALED		SEALED			
DISCH	SUCT	CASE BORE	A	B	D	D1	E2	G	H	J	J2	K	L	N & V	R2	S	T	U	M	W	CP	M	W	CP	X	YY	Z
2 1/2	3	10	13.813	11.813	9.875	7.750	11.438	1.000	0.875	2.563	2.563	0.250	1.750	3.125	9.438	5.125	1.250	1.125	12.938	16.313	29.250	9.625	12.938	22.563	8.875	11.063	5.125
3	4	10	13.813	11.813	11.000	7.625	11.438	1.000	0.875	2.563	2.563	0.250	1.750	3.125	9.438	5.125	1.250	1.125	12.938	16.313	29.250	9.625	12.938	22.563	9.063	10.625	5.125
4	6	10	13.813	11.813	13.375	8.563	11.438	1.000	0.875	2.938	2.938	0.500	3.750	4.313	9.438	6.688	1.875	1.625	15.688	20.250	35.938	11.813	16.375	28.188	9.875	12.188	6.688
5	6	10	15.750	13.000	13.375	8.875	13.375	1.000	0.875	2.938	2.938	0.250	1.750	3.125	10.625	7.125	1.250	1.125	14.188	17.500	31.688	10.813	14.188	25.000	9.875	12.813	7.125
6	8	10	15.750	13.000	15.375	9.688	13.375	1.000	0.875	2.938	2.938	0.250	1.750	3.125	10.625	7.875	1.250	1.125	14.188	17.500	31.688	10.813	14.188	25.000	12.188	14.375	7.875
10	10	10	15.750	16.563	17.313	12.000	13.375	1.000	0.875	2.938	2.938	0.500	3.750	4.313	14.188	8.250	1.875	1.625	17.500	22.063	39.563	13.625	18.125	31.750	13.375	19.313	8.250
5	6	11	13.813	11.813	13.375	10.063	11.438	1.000	0.875	2.938	2.563	0.250	1.750	3.125	9.438	6.313	1.250	1.125	12.938	16.313	29.250	9.625	12.938	22.563	11.438	12.188	6.313
3	4	12	13.813	11.813	11.000	8.688	11.438	1.000	0.875	2.563	2.563	0.250	1.750	3.125	9.438	5.938	1.250	1.125	12.938	16.313	29.250	9.625	12.938	22.563	10.813	11.438	5.938
4	5	12	13.813	11.813	12.625	9.625	11.438	1.000	0.875	2.563	2.563	0.250	1.750	3.125	9.438	6.688	1.250	1.125	12.938	16.313	29.250	9.625	12.938	22.563	10.813	12.625	6.688
5	6	12	15.750	13.000	13.375	10.000	13.375	1.000	0.875	2.938	2.938	0.250	1.750	3.125	10.625	6.875	1.250	1.125	14.188	17.500	31.688	10.813	14.188	25.000	11.438	13.188	6.875
6	8	12	15.750	16.563	17.313	10.813	13.375	1.000	0.875	2.938	2.938	0.500	3.750	4.313	14.188	9.250	1.875	1.625	15.688	20.250	35.938	11.813	16.375	28.188	12.438	14.375	9.250
8	10	12	20.063	19.688	21.250	12.188	17.750	1.000	0.875	2.938	2.938	0.500	3.750	4.313	17.313	11.250	1.875	1.625	17.500	22.063	39.563	13.625	18.125	31.750	15.188	17.750	11.250
10	10	12	20.063	19.688	21.250	12.563	17.750	1.000	0.875	2.938	2.938	0.500	3.750	4.313	17.313	9.875	1.875	1.625	17.500	22.063	39.563	13.625	18.125	31.750	15.750	16.938	9.875
12	14	14	29.125	19.688	25.625	14.000	24.375	1.000	0.750	4.750	3.938	0.813	3.125	4.125	15.750	13.000	2.750	2.563	19.438	24.250	43.688	19.438	24.250	43.688	17.750	23.625	13.000
2	3	15	15.750	13.000	11.813	10.313	13.375	1.000	0.875	2.563	2.563	0.250	1.750	3.125	10.625	6.688	1.250	1.125	12.938	16.313	29.250	9.625	12.938	22.563	11.063	14.000	6.688
3	4	15	15.750	13.000	12.625	10.938	13.375	1.000	0.875	2.563	2.563	0.250	1.750	3.125	10.625	6.875	1.250	1.125	12.938	16.313	29.250	9.625	12.938	22.563	13.813	13.375	6.875
4	5	15	17.750	13.000	13.375	11.188	15.375	1.000	0.875	2.938	2.938	0.500	3.750	4.313	10.625	7.500	1.875	1.625	15.688	20.250	35.938	11.813	16.375	28.188	13.813	13.375	7.500
5	6	15	17.750	13.000	15.375	11.688	15.375	1.000	0.875	2.938	2.938	0.500	3.750	4.313	10.625	8.250	1.875	1.625	15.688	20.250	35.938	11.813	16.375	28.188	13.813	15.750	8.250
6	8	15	15.750	16.563	17.313	11.313	13.375	1.000	0.875	2.938	2.938	0.500	3.750	4.313	14.188	8.250	1.875	1.625	15.688	20.250	35.938	11.813	16.375	28.188	13.813	16.125	8.250
8	10	15	20.063	16.563	18.125	13.375	17.313	1.125	1.125	3.563	3.563	0.625	4.250	6.000	13.813	8.875	2.438	2.125	18.125	24.313	42.438	14.625	20.813	35.438	16.563	18.875	8.875
10	12	15	22.063	19.688	21.250	15.500	19.313	1.125	1.125	3.563	3.563	0.625	4.250	6.000	16.938	10.438	2.438	2.125	18.125	24.313	42.438	14.625	20.813	35.438	16.563	21.563	10.438
14	14	15	31.500	22.438	27.563	15.750	26.000	1.125	0.875	5.500	4.375	0.875	3.750	4.938	18.125	14.563	3.563	3.375	23.625	29.125	52.750	23.625	29.125	52.750	19.688	27.563	14.563
10	12	16	33.063	22.438	22.813	14.000	27.563	1.125	0.875	5.500	4.375	0.875	3.750	4.938	18.125	12.188	3.563	3.375	23.625	29.125	52.750	23.625	29.125	52.750	21.688	25.625	12.188
4	5	18	17.750	13.000	15.375	11.813	15.375	1.000	0.875	2.938	2.938	0.500	3.750	4.313	10.625	8.250	1.875	1.625	15.688	20.250	35.938	11.813	16.375	28.188	13.813	15.750	8.250
5	8	18	22.063	17.750	19.688	13.875	19.313	1.125	1.125	3.563	3.563	0.625	4.250	6.000	15.375	10.250	2.438	2.125	18.125	24.313	42.438	14.625	20.813	35.438	17.750	18.875	10.250
6	8	18	22.063	17.750	21.250	14.750	19.313	1.125	1.125	3.563	3.563	0.625	4.250	6.000	15.375	10.625	2.438	2.125	18.125	24.313	42.438	14.625	20.813	35.438	17.750	20.063	10.625
8	10	18	22.063	17.750	21.250	14.688	19.313	1.125	1.125	3.563	3.563	0.625	4.250	6.000	15.375	10.625	2.438	2.125	18.125	24.313	42.438	14.625	20.813	35.438	17.750	16.063	10.625
12	14	18	37.000	28.375	25.625	16.125	31.500	1.125	0.875	5.500	4.375	1.000	5.125	5.875	24.000	13.563	3.938	3.750	26.875	33.563	60.438	26.875	33.563	60.438	23.625	26.750	13.563
14	18	18	37.000	29.938	29.500	18.000	31.500	1.125	1.063	5.500	4.375	1.000	5.125	5.938	25.625	15.750	3.938	3.750	26.875	33.563	60.438	26.875	33.563	60.438	23.625	27.563	15.750
10	12	20	33.063	22.438	22.813	15.000	27.563	1.125	0.875	5.500	4.375	0.875	3.750	4.938	18.125	12.188	3.563	3.375	23.625	29.125	52.750	23.625	29.125	52.750	23.625	25.625	12.188
14	18	21	37.000	29.938	29.500	18.000	31.500	1.125	1.063	5.500	4.375	1.000	5.125	5.875	25.625	15.750	3.938	3.750	26.875	33.563	60.438	26.875	33.563	60.438	23.625	27.563	15.750
8	10	22	34.250	19.688	22.063	15.563	29.500	1.000	0.750	4.750	3.938	0.813	3.125	4.125	15.750	13.188	2.750	2.563	19.438	24.250	43.688	19.438	24.250	43.688	21.688	21.688	13.188
12	14	23	33.063	22.438	27.563	17.313	27.563	1.125	0.875	5.500	4.375	0.875	3.750	4.938	18.125	14.563	3.563	3.375	23.625	29.125	52.750	23.625	29.125	52.750	19.688	25.625	14.563
10	12	26	39.375	22.438	27.563	18.875	33.875	1.188	0.875	5.500	4.375	0.875	3.750	4.938	18.125	15.750	3.563	3.375	23.625	29.125	52.750	23.625	29.125	52.750	27.563	27.563	15.750

May 28, 2004

340 SERIES HD

AMERICAN-MARSH PUMPS

A WILO BRAND

DOUBLE SUCTION SPLITCASE PUMP ONLY

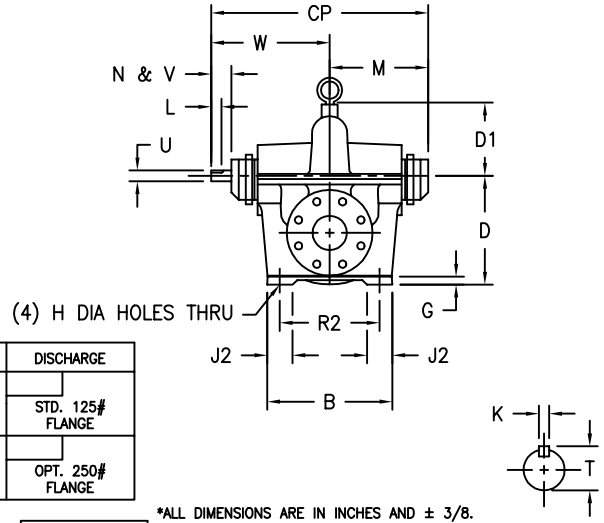

SUCTION	DISCHARGE
STD. 125# FLANGE	STD. 125# FLANGE
OPT. 250# FLANGE	OPT. 250# FLANGE

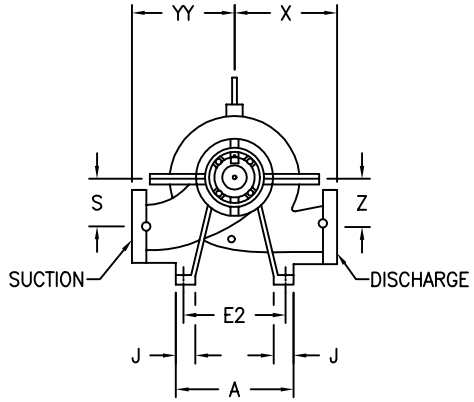

RIGHT HAND ROTATION
(STANDARD)

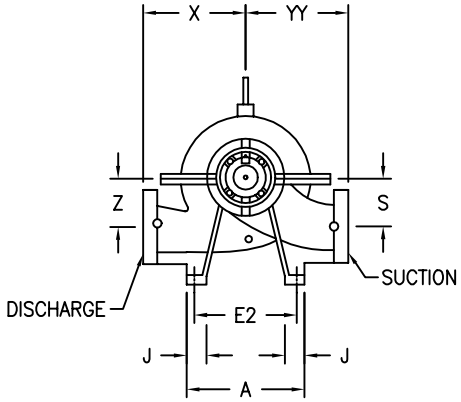

LEFT HAND ROTATION
(NON–STANDARD)

*ALL DIMENSIONS ARE IN INCHES AND ± 3/8.
*NOT FOR CONSTUCTION. UNLESS CERTIFIED BY ENGINEERING.

PUMP SIZE																			PACKED		PACKED	SEALED		SEALED			
DISCH	SUCT	CASE BORE	A	B	D	D1	E2	G	H	J	J2	K	L	N & V	R2	S	T	U	M	W	CP	M	W	CP	X	YY	Z
2 1/2	3	10	13.813	11.813	9.875	7.750	11.438	1.000	0.875	2.563	2.563	0.250	1.750	3.125	9.438	5.125	1.250	1.125	12.938	16.313	29.250	9.625	12.938	22.563	8.875	11.063	5.125
3	4	10	13.813	11.813	11.000	7.625	11.438	1.000	0.875	2.563	2.563	0.250	1.750	3.125	9.438	5.125	1.250	1.125	12.938	16.313	29.250	9.625	12.938	22.563	9.063	10.625	5.125
4	6	10	13.813	11.813	13.375	8.563	11.438	1.000	0.875	2.938	2.938	0.500	3.750	4.313	9.438	6.688	1.875	1.625	15.688	20.250	35.938	11.813	16.375	28.188	9.875	12.188	6.688
5	6	10	15.750	13.000	13.375	8.875	13.375	1.000	0.875	2.938	2.938	0.250	1.750	3.125	10.625	7.125	1.250	1.125	14.188	17.500	31.688	10.813	14.188	25.000	9.875	12.813	7.125
6	8	10	15.750	13.000	15.375	9.688	13.375	1.000	0.875	2.938	2.938	0.250	1.750	3.125	10.625	7.875	1.250	1.125	14.188	17.500	31.688	10.813	14.188	25.000	12.188	14.375	7.875
10	10	10	15.750	16.563	17.313	12.000	13.375	1.000	0.875	2.938	2.938	0.500	3.750	4.313	14.188	8.250	1.875	1.625	17.500	22.063	39.563	13.625	18.125	31.750	13.375	19.313	8.250
5	6	11	13.813	11.813	13.375	10.063	11.438	1.000	0.875	2.938	2.563	0.250	1.750	3.125	9.438	6.313	1.250	1.125	12.938	16.313	29.250	9.625	12.938	22.563	11.438	12.188	6.313
3	4	12	13.813	11.813	11.000	8.688	11.438	1.000	0.875	2.563	2.563	0.250	1.750	3.125	9.438	5.938	1.250	1.125	12.938	16.313	29.250	9.625	12.938	22.563	10.813	11.438	5.938
4	5	12	13.813	11.813	12.625	9.625	11.438	1.000	0.875	2.563	2.563	0.250	1.750	3.125	9.438	6.688	1.250	1.125	12.938	16.313	29.250	9.625	12.938	22.563	10.813	12.625	6.688
5	6	12	15.750	13.000	13.375	10.000	13.375	1.000	0.875	2.938	2.938	0.250	1.750	3.125	10.625	6.875	1.250	1.125	14.188	17.500	31.688	10.813	14.188	25.000	11.438	13.188	6.875
6	8	12	15.750	16.563	17.313	10.813	13.375	1.000	0.875	2.938	2.938	0.500	3.750	4.313	14.188	9.250	1.875	1.625	15.688	20.250	35.938	11.813	16.375	28.188	12.438	14.375	9.250
8	10	12	20.063	19.688	21.250	12.188	17.750	1.000	0.875	2.938	2.938	0.500	3.750	4.313	17.313	11.250	1.875	1.625	17.500	22.063	39.563	13.625	18.125	31.750	15.188	17.750	11.250
10	10	12	20.063	19.688	21.250	12.563	17.750	1.000	0.875	2.938	2.938	0.500	3.750	4.313	17.313	9.875	1.875	1.625	17.500	22.063	39.563	13.625	18.125	31.750	15.750	16.938	9.875
12	14	14	29.125	19.688	25.625	14.000	24.375	1.000	0.750	4.750	3.938	0.813	3.125	4.125	15.750	13.000	2.750	2.563	19.438	24.250	43.688	19.438	24.250	43.688	17.750	23.625	13.000
2	3	15	15.750	13.000	11.813	10.313	13.375	1.000	0.875	2.563	2.563	0.250	1.750	3.125	10.625	6.688	1.250	1.125	12.938	16.313	29.250	9.625	12.938	22.563	11.063	14.000	6.688
3	4	15	15.750	13.000	12.625	10.938	13.375	1.000	0.875	2.563	2.563	0.250	1.750	3.125	10.625	6.875	1.250	1.125	12.938	16.313	29.250	9.625	12.938	22.563	13.813	13.375	6.875
4	5	15	17.750	13.000	13.375	11.188	15.375	1.000	0.875	2.938	2.938	0.500	3.750	4.313	10.625	7.500	1.875	1.625	15.688	20.250	35.938	11.813	16.375	28.188	13.813	13.375	7.500
5	6	15	17.750	13.000	15.375	11.688	15.375	1.000	0.875	2.938	2.938	0.500	3.750	4.313	10.625	8.250	1.875	1.625	15.688	20.250	35.938	11.813	16.375	28.188	13.813	15.750	8.250
6	8	15	15.750	16.563	17.313	11.313	13.375	1.000	0.875	2.938	2.938	0.500	3.750	4.313	14.188	8.250	1.875	1.625	15.688	20.250	35.938	11.813	16.375	28.188	13.813	16.125	8.250
8	10	15	20.063	16.563	18.125	13.375	17.313	1.125	1.125	3.563	3.563	0.625	4.250	6.000	13.813	8.875	2.438	2.125	18.125	24.313	42.438	14.625	20.813	35.438	16.563	18.875	8.875
10	12	15	22.063	19.688	21.250	15.500	19.313	1.125	1.125	3.563	3.563	0.625	4.250	6.000	16.938	10.438	2.438	2.125	18.125	24.313	42.438	14.625	20.813	35.438	16.563	21.563	10.438
14	14	15	31.500	22.438	27.563	15.750	26.000	1.125	0.875	5.500	4.375	0.875	3.750	4.938	18.125	14.563	3.563	3.375	23.625	29.125	52.750	23.625	29.125	52.750	19.688	27.563	14.563
10	12	16	33.063	22.438	22.813	14.000	27.563	1.125	0.875	5.500	4.375	0.875	3.750	4.938	18.125	12.188	3.563	3.375	23.625	29.125	52.750	23.625	29.125	52.750	21.688	25.625	12.188
4	5	18	17.750	13.000	15.375	11.813	15.375	1.000	0.875	2.938	2.938	0.500	3.750	4.313	10.625	8.250	1.875	1.625	15.688	20.250	35.938	11.813	16.375	28.188	13.813	15.750	8.250
5	8	18	22.063	17.750	19.688	13.875	19.313	1.125	1.125	3.563	3.563	0.625	4.250	6.000	15.375	10.250	2.438	2.125	18.125	24.313	42.438	14.625	20.813	35.438	17.750	18.875	10.250
6	8	18	22.063	17.750	21.250	14.750	19.313	1.125	1.125	3.563	3.563	0.625	4.250	6.000	15.375	10.625	2.438	2.125	18.125	24.313	42.438	14.625	20.813	35.438	17.750	20.063	10.625
8	10	18	22.063	17.750	21.250	14.688	19.313	1.125	1.125	3.563	3.563	0.625	4.250	6.000	15.375	10.625	2.438	2.125	18.125	24.313	42.438	14.625	20.813	35.438	17.750	16.063	10.625
12	14	18	37.000	28.375	25.625	16.125	31.500	1.125	0.875	5.500	4.375	1.000	5.125	5.875	24.000	13.563	3.938	3.750	26.875	33.563	60.438	26.875	33.563	60.438	23.625	26.750	13.563
14	18	18	37.000	29.938	29.500	18.000	31.500	1.125	1.063	5.500	4.375	1.000	5.125	5.938	25.625	15.750	3.938	3.750	26.875	33.563	60.438	26.875	33.563	60.438	23.625	27.563	15.750
10	12	20	33.063	22.438	22.813	15.000	27.563	1.125	0.875	5.500	4.375	0.875	3.750	4.938	18.125	12.188	3.563	3.375	23.625	29.125	52.750	23.625	29.125	52.750	23.625	25.625	12.188
14	18	21	37.000	29.938	29.500	18.000	31.500	1.125	1.063	5.500	4.375	1.000	5.125	5.875	25.625	15.750	3.938	3.750	26.875	33.563	60.438	26.875	33.563	60.438	23.625	27.563	15.750
8	10	22	34.250	19.688	22.063	15.563	29.500	1.000	0.750	4.750	3.938	0.813	3.125	4.125	15.750	13.188	2.750	2.563	19.438	24.250	43.688	19.438	24.250	43.688	21.688	21.688	13.188
12	14	23	33.063	22.438	27.563	17.313	27.563	1.125	0.875	5.500	4.375	0.875	3.750	4.938	18.125	14.563	3.563	3.375	23.625	29.125	52.750	23.625	29.125	52.750	19.688	25.625	14.563
10	12	26	39.375	22.438	27.563	18.875	33.875	1.188	0.875	5.500	4.375	0.875	3.750	4.938	18.125	15.750	3.563	3.375	23.625	29.125	52.750	23.625	29.125	52.750	27.563	27.563	15.750

May 28, 2004

340 SERIES HD

AMERICAN-MARSH PUMPS

A WILO BRAND

DOUBLE SUCTION SPLITCASE PUMP ONLY

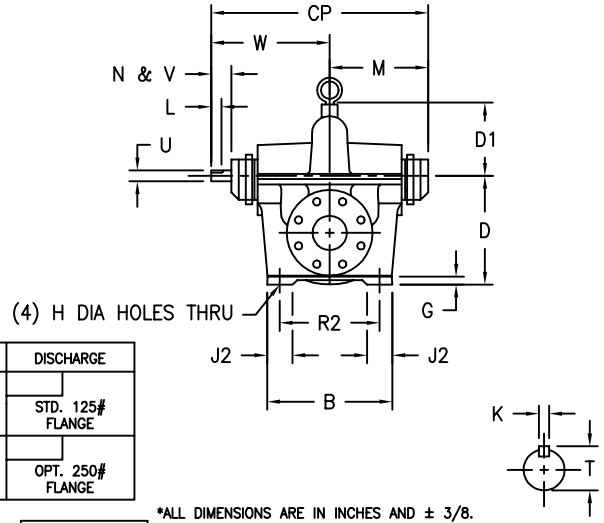

SUCTION	DISCHARGE
STD. 125# FLANGE	STD. 125# FLANGE
OPT. 250# FLANGE	OPT. 250# FLANGE

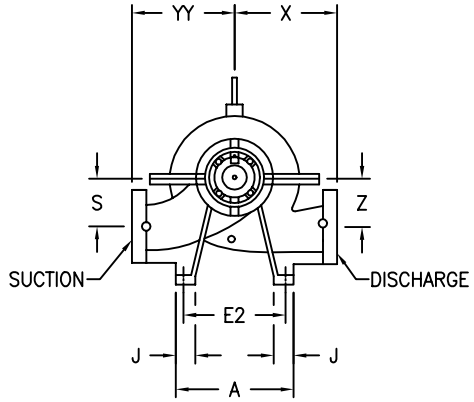

RIGHT HAND ROTATION
(STANDARD)

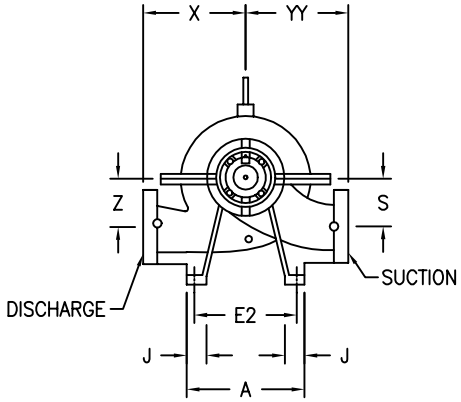

LEFT HAND ROTATION
(NON–STANDARD)

*ALL DIMENSIONS ARE IN INCHES AND ± 3/8.
*NOT FOR CONSTUCTION. UNLESS CERTIFIED BY ENGINEERING.

PUMP SIZE																			PACKED		PACKED	SEALED		SEALED			
DISCH	SUCT	CASE BORE	A	B	D	D1	E2	G	H	J	J2	K	L	N & V	R2	S	T	U	M	W	CP	M	W	CP	X	YY	Z
2 1/2	3	10	13.813	11.813	9.875	7.750	11.438	1.000	0.875	2.563	2.563	0.250	1.750	3.125	9.438	5.125	1.250	1.125	12.938	16.313	29.250	9.625	12.938	22.563	8.875	11.063	5.125
3	4	10	13.813	11.813	11.000	7.625	11.438	1.000	0.875	2.563	2.563	0.250	1.750	3.125	9.438	5.125	1.250	1.125	12.938	16.313	29.250	9.625	12.938	22.563	9.063	10.625	5.125
4	6	10	13.813	11.813	13.375	8.563	11.438	1.000	0.875	2.938	2.938	0.500	3.750	4.313	9.438	6.688	1.875	1.625	15.688	20.250	35.938	11.813	16.375	28.188	9.875	12.188	6.688
5	6	10	15.750	13.000	13.375	8.875	13.375	1.000	0.875	2.938	2.938	0.250	1.750	3.125	10.625	7.125	1.250	1.125	14.188	17.500	31.688	10.813	14.188	25.000	9.875	12.813	7.125
6	8	10	15.750	13.000	15.375	9.688	13.375	1.000	0.875	2.938	2.938	0.250	1.750	3.125	10.625	7.875	1.250	1.125	14.188	17.500	31.688	10.813	14.188	25.000	12.188	14.375	7.875
10	10	10	15.750	16.563	17.313	12.000	13.375	1.000	0.875	2.938	2.938	0.500	3.750	4.313	14.188	8.250	1.875	1.625	17.500	22.063	39.563	13.625	18.125	31.750	13.375	19.313	8.250
5	6	11	13.813	11.813	13.375	10.063	11.438	1.000	0.875	2.938	2.563	0.250	1.750	3.125	9.438	6.313	1.250	1.125	12.938	16.313	29.250	9.625	12.938	22.563	11.438	12.188	6.313
3	4	12	13.813	11.813	11.000	8.688	11.438	1.000	0.875	2.563	2.563	0.250	1.750	3.125	9.438	5.938	1.250	1.125	12.938	16.313	29.250	9.625	12.938	22.563	10.813	11.438	5.938
4	5	12	13.813	11.813	12.625	9.625	11.438	1.000	0.875	2.563	2.563	0.250	1.750	3.125	9.438	6.688	1.250	1.125	12.938	16.313	29.250	9.625	12.938	22.563	10.813	12.625	6.688
5	6	12	15.750	13.000	13.375	10.000	13.375	1.000	0.875	2.938	2.938	0.250	1.750	3.125	10.625	6.875	1.250	1.125	14.188	17.500	31.688	10.813	14.188	25.000	11.438	13.188	6.875
6	8	12	15.750	16.563	17.313	10.813	13.375	1.000	0.875	2.938	2.938	0.500	3.750	4.313	14.188	9.250	1.875	1.625	15.688	20.250	35.938	11.813	16.375	28.188	12.438	14.375	9.250
8	10	12	20.063	19.688	21.250	12.188	17.750	1.000	0.875	2.938	2.938	0.500	3.750	4.313	17.313	11.250	1.875	1.625	17.500	22.063	39.563	13.625	18.125	31.750	15.188	17.750	11.250
10	10	12	20.063	19.688	21.250	12.563	17.750	1.000	0.875	2.938	2.938	0.500	3.750	4.313	17.313	9.875	1.875	1.625	17.500	22.063	39.563	13.625	18.125	31.750	15.750	16.938	9.875
12	14	14	29.125	19.688	25.625	14.000	24.375	1.000	0.750	4.750	3.938	0.813	3.125	4.125	15.750	13.000	2.750	2.563	19.438	24.250	43.688	19.438	24.250	43.688	17.750	23.625	13.000
2	3	15	15.750	13.000	11.813	10.313	13.375	1.000	0.875	2.563	2.563	0.250	1.750	3.125	10.625	6.688	1.250	1.125	12.938	16.313	29.250	9.625	12.938	22.563	11.063	14.000	6.688
3	4	15	15.750	13.000	12.625	10.938	13.375	1.000	0.875	2.563	2.563	0.250	1.750	3.125	10.625	6.875	1.250	1.125	12.938	16.313	29.250	9.625	12.938	22.563	13.813	13.375	6.875
4	5	15	17.750	13.000	13.375	11.188	15.375	1.000	0.875	2.938	2.938	0.500	3.750	4.313	10.625	7.500	1.875	1.625	15.688	20.250	35.938	11.813	16.375	28.188	13.813	13.375	7.500
5	6	15	17.750	13.000	15.375	11.688	15.375	1.000	0.875	2.938	2.938	0.500	3.750	4.313	10.625	8.250	1.875	1.625	15.688	20.250	35.938	11.813	16.375	28.188	13.813	15.750	8.250
6	8	15	15.750	16.563	17.313	11.313	13.375	1.000	0.875	2.938	2.938	0.500	3.750	4.313	14.188	8.250	1.875	1.625	15.688	20.250	35.938	11.813	16.375	28.188	13.813	16.125	8.250
8	10	15	20.063	16.563	18.125	13.375	17.313	1.125	1.125	3.563	3.563	0.625	4.250	6.000	13.813	8.875	2.438	2.125	18.125	24.313	42.438	14.625	20.813	35.438	16.563	18.875	8.875
10	12	15	22.063	19.688	21.250	15.500	19.313	1.125	1.125	3.563	3.563	0.625	4.250	6.000	16.938	10.438	2.438	2.125	18.125	24.313	42.438	14.625	20.813	35.438	16.563	21.563	10.438
14	14	15	31.500	22.438	27.563	15.750	26.000	1.125	0.875	5.500	4.375	0.875	3.750	4.938	18.125	14.563	3.563	3.375	23.625	29.125	52.750	23.625	29.125	52.750	19.688	27.563	14.563
10	12	16	33.063	22.438	22.813	14.000	27.563	1.125	0.875	5.500	4.375	0.875	3.750	4.938	18.125	12.188	3.563	3.375	23.625	29.125	52.750	23.625	29.125	52.750	21.688	25.625	12.188
4	5	18	17.750	13.000	15.375	11.813	15.375	1.000	0.875	2.938	2.938	0.500	3.750	4.313	10.625	8.250	1.875	1.625	15.688	20.250	35.938	11.813	16.375	28.188	13.813	15.750	8.250
5	8	18	22.063	17.750	19.688	13.875	19.313	1.125	1.125	3.563	3.563	0.625	4.250	6.000	15.375	10.250	2.438	2.125	18.125	24.313	42.438	14.625	20.813	35.438	17.750	18.875	10.250
6	8	18	22.063	17.750	21.250	14.750	19.313	1.125	1.125	3.563	3.563	0.625	4.250	6.000	15.375	10.625	2.438	2.125	18.125	24.313	42.438	14.625	20.813	35.438	17.750	20.063	10.625
8	10	18	22.063	17.750	21.250	14.688	19.313	1.125	1.125	3.563	3.563	0.625	4.250	6.000	15.375	10.625	2.438	2.125	18.125	24.313	42.438	14.625	20.813	35.438	17.750	16.063	10.625
12	14	18	37.000	28.375	25.625	16.125	31.500	1.125	0.875	5.500	4.375	1.000	5.125	5.875	24.000	13.563	3.938	3.750	26.875	33.563	60.438	26.875	33.563	60.438	23.625	26.750	13.563
14	18	18	37.000	29.938	29.500	18.000	31.500	1.125	1.063	5.500	4.375	1.000	5.125	5.938	25.625	15.750	3.938	3.750	26.875	33.563	60.438	26.875	33.563	60.438	23.625	27.563	15.750
10	12	20	33.063	22.438	22.813	15.000	27.563	1.125	0.875	5.500	4.375	0.875	3.750	4.938	18.125	12.188	3.563	3.375	23.625	29.125	52.750	23.625	29.125	52.750	23.625	25.625	12.188
14	18	21	37.000	29.938	29.500	18.000	31.500	1.125	1.063	5.500	4.375	1.000	5.125	5.875	25.625	15.750	3.938	3.750	26.875	33.563	60.438	26.875	33.563	60.438	23.625	27.563	15.750
8	10	22	34.250	19.688	22.063	15.563	29.500	1.000	0.750	4.750	3.938	0.813	3.125	4.125	15.750	13.188	2.750	2.563	19.438	24.250	43.688	19.438	24.250	43.688	21.688	21.688	13.188
12	14	23	33.063	22.438	27.563	17.313	27.563	1.125	0.875	5.500	4.375	0.875	3.750	4.938	18.125	14.563	3.563	3.375	23.625	29.125	52.750	23.625	29.125	52.750	19.688	25.625	14.563
10	12	26	39.375	22.438	27.563	18.875	33.875	1.188	0.875	5.500	4.375	0.875	3.750	4.938	18.125	15.750	3.563	3.375	23.625	29.125	52.750	23.625	29.125	52.750	27.563	27.563	15.750

May 28, 2004

340 SERIES HD

AMERICAN-MARSH PUMPS

A WILO BRAND

DOUBLE SUCTION SPLITCASE PUMP ONLY

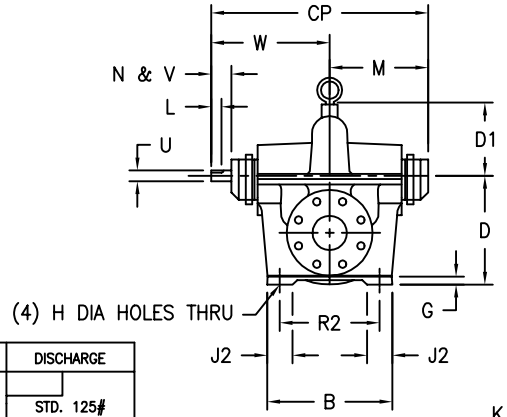

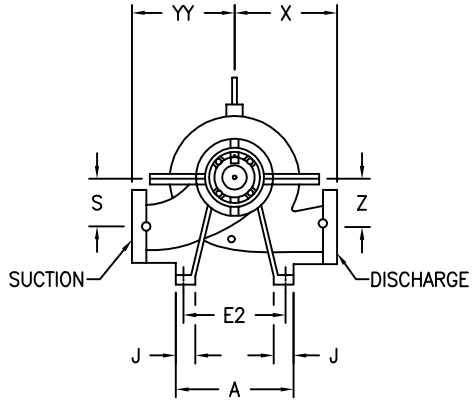

RIGHT HAND ROTATION
(STANDARD)

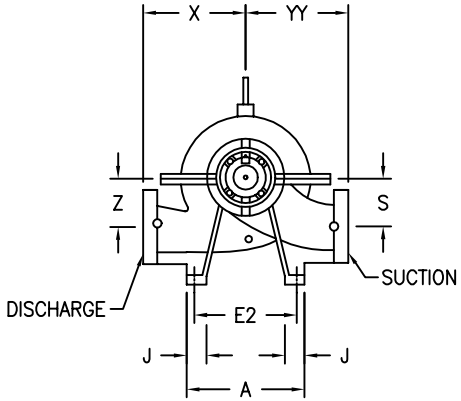

LEFT HAND ROTATION
(NON–STANDARD)

SUCTION	DISCHARGE
STD. 125# FLANGE	STD. 125# FLANGE
OPT. 250# FLANGE	OPT. 250# FLANGE

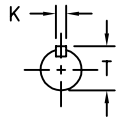

*ALL DIMENSIONS ARE IN INCHES AND ± 3/8.
*NOT FOR CONSTUCTION. UNLESS CERTIFIED BY ENGINEERING.

PUMP SIZE																			PACKED		PACKED	SEALED		SEALED			
DISCH	SUCT	CASE BORE	A	B	D	D1	E2	G	H	J	J2	K	L	N & V	R2	S	T	U	M	W	CP	M	W	CP	X	YY	Z
2 1/2	3	10	13.813	11.813	9.875	7.750	11.438	1.000	0.875	2.563	2.563	0.250	1.750	3.125	9.438	5.125	1.250	1.125	12.938	16.313	29.250	9.625	12.938	22.563	8.875	11.063	5.125
3	4	10	13.813	11.813	11.000	7.625	11.438	1.000	0.875	2.563	2.563	0.250	1.750	3.125	9.438	5.125	1.250	1.125	12.938	16.313	29.250	9.625	12.938	22.563	9.063	10.625	5.125
4	6	10	13.813	11.813	13.375	8.563	11.438	1.000	0.875	2.938	2.938	0.500	3.750	4.313	9.438	6.688	1.875	1.625	15.688	20.250	35.938	11.813	16.375	28.188	9.875	12.188	6.688
5	6	10	15.750	13.000	13.375	8.875	13.375	1.000	0.875	2.938	2.938	0.250	1.750	3.125	10.625	7.125	1.250	1.125	14.188	17.500	31.688	10.813	14.188	25.000	9.875	12.813	7.125
6	8	10	15.750	13.000	15.375	9.688	13.375	1.000	0.875	2.938	2.938	0.250	1.750	3.125	10.625	7.875	1.250	1.125	14.188	17.500	31.688	10.813	14.188	25.000	12.188	14.375	7.875
10	10	10	15.750	16.563	17.313	12.000	13.375	1.000	0.875	2.938	2.938	0.500	3.750	4.313	14.188	8.250	1.875	1.625	17.500	22.063	39.563	13.625	18.125	31.750	13.375	19.313	8.250
5	6	11	13.813	11.813	13.375	10.063	11.438	1.000	0.875	2.938	2.563	0.250	1.750	3.125	9.438	6.313	1.250	1.125	12.938	16.313	29.250	9.625	12.938	22.563	11.438	12.188	6.313
3	4	12	13.813	11.813	11.000	8.688	11.438	1.000	0.875	2.563	2.563	0.250	1.750	3.125	9.438	5.938	1.250	1.125	12.938	16.313	29.250	9.625	12.938	22.563	10.813	11.438	5.938
4	5	12	13.813	11.813	12.625	9.625	11.438	1.000	0.875	2.563	2.563	0.250	1.750	3.125	9.438	6.688	1.250	1.125	12.938	16.313	29.250	9.625	12.938	22.563	10.813	12.625	6.688
5	6	12	15.750	13.000	13.375	10.000	13.375	1.000	0.875	2.938	2.938	0.250	1.750	3.125	10.625	6.875	1.250	1.125	14.188	17.500	31.688	10.813	14.188	25.000	11.438	13.188	6.875
6	8	12	15.750	16.563	17.313	10.813	13.375	1.000	0.875	2.938	2.938	0.500	3.750	4.313	14.188	9.250	1.875	1.625	15.688	20.250	35.938	11.813	16.375	28.188	12.438	14.375	9.250
8	10	12	20.063	19.688	21.250	12.188	17.750	1.000	0.875	2.938	2.938	0.500	3.750	4.313	17.313	11.250	1.875	1.625	17.500	22.063	39.563	13.625	18.125	31.750	15.188	17.750	11.250
10	10	12	20.063	19.688	21.250	12.563	17.750	1.000	0.875	2.938	2.938	0.500	3.750	4.313	17.313	9.875	1.875	1.625	17.500	22.063	39.563	13.625	18.125	31.750	15.750	16.938	9.875
12	14	14	29.125	19.688	25.625	14.000	24.375	1.000	0.750	4.750	3.938	0.813	3.125	4.125	15.750	13.000	2.750	2.563	19.438	24.250	43.688	19.438	24.250	43.688	17.750	23.625	13.000
2	3	15	15.750	13.000	11.813	10.313	13.375	1.000	0.875	2.563	2.563	0.250	1.750	3.125	10.625	6.688	1.250	1.125	12.938	16.313	29.250	9.625	12.938	22.563	11.063	14.000	6.688
3	4	15	15.750	13.000	12.625	10.938	13.375	1.000	0.875	2.563	2.563	0.250	1.750	3.125	10.625	6.875	1.250	1.125	12.938	16.313	29.250	9.625	12.938	22.563	13.813	13.375	6.875
4	5	15	17.750	13.000	13.375	11.188	15.375	1.000	0.875	2.938	2.938	0.500	3.750	4.313	10.625	7.500	1.875	1.625	15.688	20.250	35.938	11.813	16.375	28.188	13.813	13.375	7.500
5	6	15	17.750	13.000	15.375	11.688	15.375	1.000	0.875	2.938	2.938	0.500	3.750	4.313	10.625	8.250	1.875	1.625	15.688	20.250	35.938	11.813	16.375	28.188	13.813	15.750	8.250
6	8	15	15.750	16.563	17.313	11.313	13.375	1.000	0.875	2.938	2.938	0.500	3.750	4.313	14.188	8.250	1.875	1.625	15.688	20.250	35.938	11.813	16.375	28.188	13.813	16.125	8.250
8	10	15	20.063	16.563	18.125	13.375	17.313	1.125	1.125	3.563	3.563	0.625	4.250	6.000	13.813	8.875	2.438	2.125	18.125	24.313	42.438	14.625	20.813	35.438	16.563	18.875	8.875
10	12	15	22.063	19.688	21.250	15.500	19.313	1.125	1.125	3.563	3.563	0.625	4.250	6.000	16.938	10.438	2.438	2.125	18.125	24.313	42.438	14.625	20.813	35.438	16.563	21.563	10.438
14	14	15	31.500	22.438	27.563	15.750	26.000	1.125	0.875	5.500	4.375	0.875	3.750	4.938	18.125	14.563	3.563	3.375	23.625	29.125	52.750	23.625	29.125	52.750	19.688	27.563	14.563
10	12	16	33.063	22.438	22.813	14.000	27.563	1.125	0.875	5.500	4.375	0.875	3.750	4.938	18.125	12.188	3.563	3.375	23.625	29.125	52.750	23.625	29.125	52.750	21.688	25.625	12.188
4	5	18	17.750	13.000	15.375	11.813	15.375	1.000	0.875	2.938	2.938	0.500	3.750	4.313	10.625	8.250	1.875	1.625	15.688	20.250	35.938	11.813	16.375	28.188	13.813	15.750	8.250
5	8	18	22.063	17.750	19.688	13.875	19.313	1.125	1.125	3.563	3.563	0.625	4.250	6.000	15.375	10.250	2.438	2.125	18.125	24.313	42.438	14.625	20.813	35.438	17.750	18.875	10.250
6	8	18	22.063	17.750	21.250	14.750	19.313	1.125	1.125	3.563	3.563	0.625	4.250	6.000	15.375	10.625	2.438	2.125	18.125	24.313	42.438	14.625	20.813	35.438	17.750	20.063	10.625
8	10	18	22.063	17.750	21.250	14.688	19.313	1.125	1.125	3.563	3.563	0.625	4.250	6.000	15.375	10.625	2.438	2.125	18.125	24.313	42.438	14.625	20.813	35.438	17.750	16.063	10.625
12	14	18	37.000	28.375	25.625	16.125	31.500	1.125	0.875	5.500	4.375	1.000	5.125	5.875	24.000	13.563	3.938	3.750	26.875	33.563	60.438	26.875	33.563	60.438	23.625	26.750	13.563
14	18	18	37.000	29.938	29.500	18.000	31.500	1.125	1.063	5.500	4.375	1.000	5.125	5.938	25.625	15.750	3.938	3.750	26.875	33.563	60.438	26.875	33.563	60.438	23.625	27.563	15.750
10	12	20	33.063	22.438	22.813	15.000	27.563	1.125	0.875	5.500	4.375	0.875	3.750	4.938	18.125	12.188	3.563	3.375	23.625	29.125	52.750	23.625	29.125	52.750	23.625	25.625	12.188
14	18	21	37.000	29.938	29.500	18.000	31.500	1.125	1.063	5.500	4.375	1.000	5.125	5.875	25.625	15.750	3.938	3.750	26.875	33.563	60.438	26.875	33.563	60.438	23.625	27.563	15.750
8	10	22	34.250	19.688	22.063	15.563	29.500	1.000	0.750	4.750	3.938	0.813	3.125	4.125	15.750	13.188	2.750	2.563	19.438	24.250	43.688	19.438	24.250	43.688	21.688	21.688	13.188
12	14	23	33.063	22.438	27.563	17.313	27.563	1.125	0.875	5.500	4.375	0.875	3.750	4.938	18.125	14.563	3.563	3.375	23.625	29.125	52.750	23.625	29.125	52.750	19.688	25.625	14.563
10	12	26	39.375	22.438	27.563	18.875	33.875	1.188	0.875	5.500	4.375	0.875	3.750	4.938	18.125	15.750	3.563	3.375	23.625	29.125	52.750	23.625	29.125	52.750	27.563	27.563	15.750

May 28, 2004

340 SERIES HD

AMERICAN-MARSH PUMPS

A WILO BRAND

DOUBLE SUCTION SPLITCASE PUMP ONLY

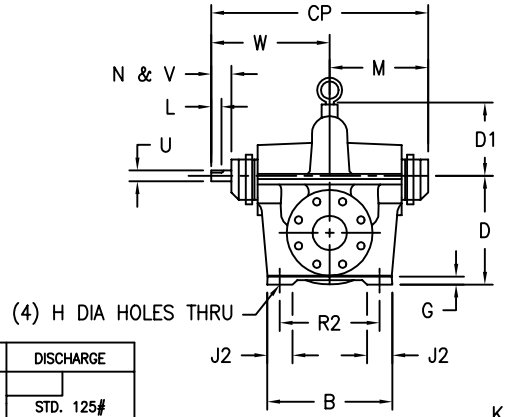

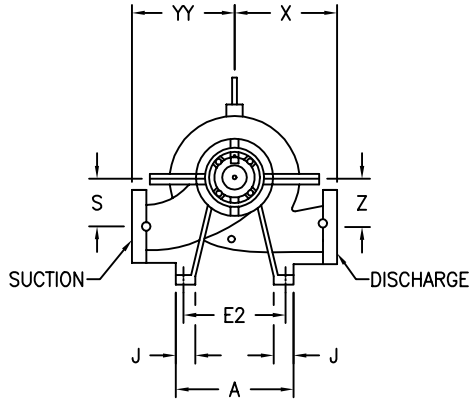

RIGHT HAND ROTATION
(STANDARD)

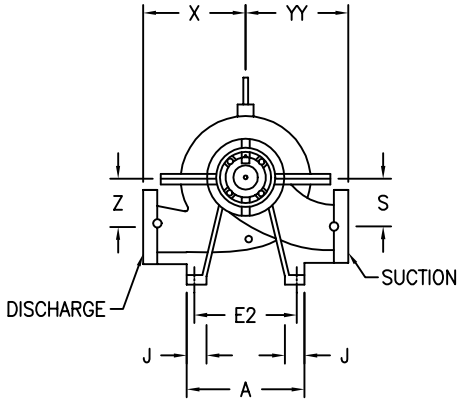

LEFT HAND ROTATION
(NON–STANDARD)

SUCTION	DISCHARGE
STD. 125# FLANGE	STD. 125# FLANGE
OPT. 250# FLANGE	OPT. 250# FLANGE

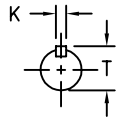

*ALL DIMENSIONS ARE IN INCHES AND ± 3/8.
*NOT FOR CONSTUCTION. UNLESS CERTIFIED BY ENGINEERING.

PUMP SIZE																			PACKED		PACKED	SEALED		SEALED			
DISCH	SUCT	CASE BORE	A	B	D	D1	E2	G	H	J	J2	K	L	N & V	R2	S	T	U	M	W	CP	M	W	CP	X	YY	Z
2 1/2	3	10	13.813	11.813	9.875	7.750	11.438	1.000	0.875	2.563	2.563	0.250	1.750	3.125	9.438	5.125	1.250	1.125	12.938	16.313	29.250	9.625	12.938	22.563	8.875	11.063	5.125
3	4	10	13.813	11.813	11.000	7.625	11.438	1.000	0.875	2.563	2.563	0.250	1.750	3.125	9.438	5.125	1.250	1.125	12.938	16.313	29.250	9.625	12.938	22.563	9.063	10.625	5.125
4	6	10	13.813	11.813	13.375	8.563	11.438	1.000	0.875	2.938	2.938	0.500	3.750	4.313	9.438	6.688	1.875	1.625	15.688	20.250	35.938	11.813	16.375	28.188	9.875	12.188	6.688
5	6	10	15.750	13.000	13.375	8.875	13.375	1.000	0.875	2.938	2.938	0.250	1.750	3.125	10.625	7.125	1.250	1.125	14.188	17.500	31.688	10.813	14.188	25.000	9.875	12.813	7.125
6	8	10	15.750	13.000	15.375	9.688	13.375	1.000	0.875	2.938	2.938	0.250	1.750	3.125	10.625	7.875	1.250	1.125	14.188	17.500	31.688	10.813	14.188	25.000	12.188	14.375	7.875
10	10	10	15.750	16.563	17.313	12.000	13.375	1.000	0.875	2.938	2.938	0.500	3.750	4.313	14.188	8.250	1.875	1.625	17.500	22.063	39.563	13.625	18.125	31.750	13.375	19.313	8.250
5	6	11	13.813	11.813	13.375	10.063	11.438	1.000	0.875	2.938	2.563	0.250	1.750	3.125	9.438	6.313	1.250	1.125	12.938	16.313	29.250	9.625	12.938	22.563	11.438	12.188	6.313
3	4	12	13.813	11.813	11.000	8.688	11.438	1.000	0.875	2.563	2.563	0.250	1.750	3.125	9.438	5.938	1.250	1.125	12.938	16.313	29.250	9.625	12.938	22.563	10.813	11.438	5.938
4	5	12	13.813	11.813	12.625	9.625	11.438	1.000	0.875	2.563	2.563	0.250	1.750	3.125	9.438	6.688	1.250	1.125	12.938	16.313	29.250	9.625	12.938	22.563	10.813	12.625	6.688
5	6	12	15.750	13.000	13.375	10.000	13.375	1.000	0.875	2.938	2.938	0.250	1.750	3.125	10.625	6.875	1.250	1.125	14.188	17.500	31.688	10.813	14.188	25.000	11.438	13.188	6.875
6	8	12	15.750	16.563	17.313	10.813	13.375	1.000	0.875	2.938	2.938	0.500	3.750	4.313	14.188	9.250	1.875	1.625	15.688	20.250	35.938	11.813	16.375	28.188	12.438	14.375	9.250
8	10	12	20.063	19.688	21.250	12.188	17.750	1.000	0.875	2.938	2.938	0.500	3.750	4.313	17.313	11.250	1.875	1.625	17.500	22.063	39.563	13.625	18.125	31.750	15.188	17.750	11.250
10	10	12	20.063	19.688	21.250	12.563	17.750	1.000	0.875	2.938	2.938	0.500	3.750	4.313	17.313	9.875	1.875	1.625	17.500	22.063	39.563	13.625	18.125	31.750	15.750	16.938	9.875
12	14	14	29.125	19.688	25.625	14.000	24.375	1.000	0.750	4.750	3.938	0.813	3.125	4.125	15.750	13.000	2.750	2.563	19.438	24.250	43.688	19.438	24.250	43.688	17.750	23.625	13.000
2	3	15	15.750	13.000	11.813	10.313	13.375	1.000	0.875	2.563	2.563	0.250	1.750	3.125	10.625	6.688	1.250	1.125	12.938	16.313	29.250	9.625	12.938	22.563	11.063	14.000	6.688
3	4	15	15.750	13.000	12.625	10.938	13.375	1.000	0.875	2.563	2.563	0.250	1.750	3.125	10.625	6.875	1.250	1.125	12.938	16.313	29.250	9.625	12.938	22.563	13.813	13.375	6.875
4	5	15	17.750	13.000	13.375	11.188	15.375	1.000	0.875	2.938	2.938	0.500	3.750	4.313	10.625	7.500	1.875	1.625	15.688	20.250	35.938	11.813	16.375	28.188	13.813	13.375	7.500
5	6	15	17.750	13.000	15.375	11.688	15.375	1.000	0.875	2.938	2.938	0.500	3.750	4.313	10.625	8.250	1.875	1.625	15.688	20.250	35.938	11.813	16.375	28.188	13.813	15.750	8.250
6	8	15	15.750	16.563	17.313	11.313	13.375	1.000	0.875	2.938	2.938	0.500	3.750	4.313	14.188	8.250	1.875	1.625	15.688	20.250	35.938	11.813	16.375	28.188	13.813	16.125	8.250
8	10	15	20.063	16.563	18.125	13.375	17.313	1.125	1.125	3.563	3.563	0.625	4.250	6.000	13.813	8.875	2.438	2.125	18.125	24.313	42.438	14.625	20.813	35.438	16.563	18.875	8.875
10	12	15	22.063	19.688	21.250	15.500	19.313	1.125	1.125	3.563	3.563	0.625	4.250	6.000	16.938	10.438	2.438	2.125	18.125	24.313	42.438	14.625	20.813	35.438	16.563	21.563	10.438
14	14	15	31.500	22.438	27.563	15.750	26.000	1.125	0.875	5.500	4.375	0.875	3.750	4.938	18.125	14.563	3.563	3.375	23.625	29.125	52.750	23.625	29.125	52.750	19.688	27.563	14.563
10	12	16	33.063	22.438	22.813	14.000	27.563	1.125	0.875	5.500	4.375	0.875	3.750	4.938	18.125	12.188	3.563	3.375	23.625	29.125	52.750	23.625	29.125	52.750	21.688	25.625	12.188
4	5	18	17.750	13.000	15.375	11.813	15.375	1.000	0.875	2.938	2.938	0.500	3.750	4.313	10.625	8.250	1.875	1.625	15.688	20.250	35.938	11.813	16.375	28.188	13.813	15.750	8.250
5	8	18	22.063	17.750	19.688	13.875	19.313	1.125	1.125	3.563	3.563	0.625	4.250	6.000	15.375	10.250	2.438	2.125	18.125	24.313	42.438	14.625	20.813	35.438	17.750	18.875	10.250
6	8	18	22.063	17.750	21.250	14.750	19.313	1.125	1.125	3.563	3.563	0.625	4.250	6.000	15.375	10.625	2.438	2.125	18.125	24.313	42.438	14.625	20.813	35.438	17.750	20.063	10.625
8	10	18	22.063	17.750	21.250	14.688	19.313	1.125	1.125	3.563	3.563	0.625	4.250	6.000	15.375	10.625	2.438	2.125	18.125	24.313	42.438	14.625	20.813	35.438	17.750	16.063	10.625
12	14	18	37.000	28.375	25.625	16.125	31.500	1.125	0.875	5.500	4.375	1.000	5.125	5.875	24.000	13.563	3.938	3.750	26.875	33.563	60.438	26.875	33.563	60.438	23.625	26.750	13.563
14	18	18	37.000	29.938	29.500	18.000	31.500	1.125	1.063	5.500	4.375	1.000	5.125	5.938	25.625	15.750	3.938	3.750	26.875	33.563	60.438	26.875	33.563	60.438	23.625	27.563	15.750
10	12	20	33.063	22.438	22.813	15.000	27.563	1.125	0.875	5.500	4.375	0.875	3.750	4.938	18.125	12.188	3.563	3.375	23.625	29.125	52.750	23.625	29.125	52.750	23.625	25.625	12.188
14	18	21	37.000	29.938	29.500	18.000	31.500	1.125	1.063	5.500	4.375	1.000	5.125	5.875	25.625	15.750	3.938	3.750	26.875	33.563	60.438	26.875	33.563	60.438	23.625	27.563	15.750
8	10	22	34.250	19.688	22.063	15.563	29.500	1.000	0.750	4.750	3.938	0.813	3.125	4.125	15.750	13.188	2.750	2.563	19.438	24.250	43.688	19.438	24.250	43.688	21.688	21.688	13.188
12	14	23	33.063	22.438	27.563	17.313	27.563	1.125	0.875	5.500	4.375	0.875	3.750	4.938	18.125	14.563	3.563	3.375	23.625	29.125	52.750	23.625	29.125	52.750	19.688	25.625	14.563
10	12	26	39.375	22.438	27.563	18.875	33.875	1.188	0.875	5.500	4.375	0.875	3.750	4.938	18.125	15.750	3.563	3.375	23.625	29.125	52.750	23.625	29.125	52.750	27.563	27.563	15.750

May 28, 2004

340 SERIES HD

AMERICAN-MARSH PUMPS

A WILO BRAND

DOUBLE SUCTION SPLITCASE PUMP ONLY

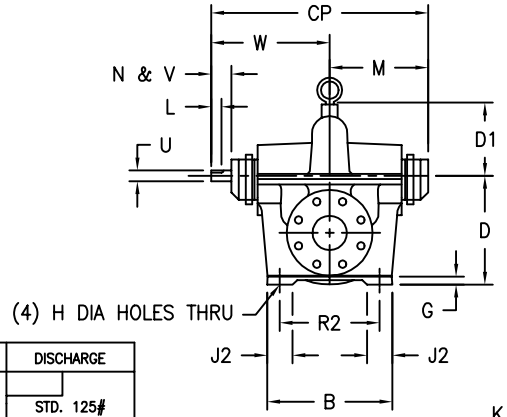

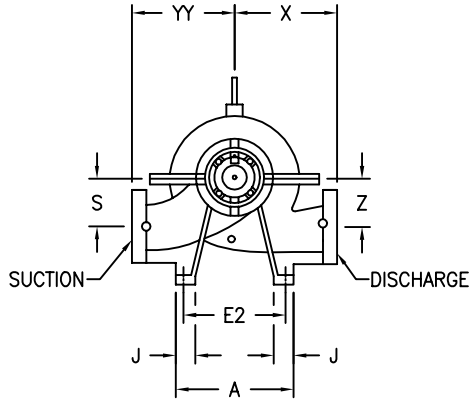

RIGHT HAND ROTATION
(STANDARD)

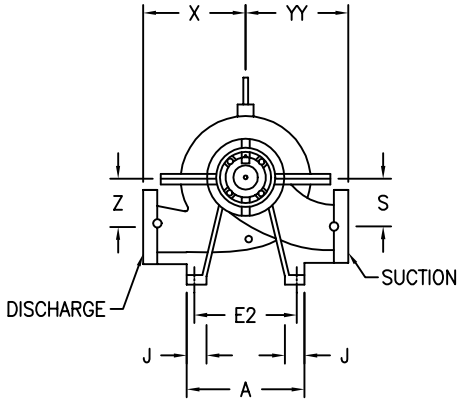

LEFT HAND ROTATION
(NON–STANDARD)

SUCTION	DISCHARGE
STD. 125# FLANGE	STD. 125# FLANGE
OPT. 250# FLANGE	OPT. 250# FLANGE

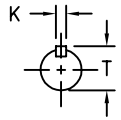

*ALL DIMENSIONS ARE IN INCHES AND ± 3/8.
*NOT FOR CONSTUCTION. UNLESS CERTIFIED BY ENGINEERING.

PUMP SIZE																			PACKED		PACKED	SEALED		SEALED			
DISCH	SUCT	CASE BORE	A	B	D	D1	E2	G	H	J	J2	K	L	N & V	R2	S	T	U	M	W	CP	M	W	CP	X	YY	Z
2 1/2	3	10	13.813	11.813	9.875	7.750	11.438	1.000	0.875	2.563	2.563	0.250	1.750	3.125	9.438	5.125	1.250	1.125	12.938	16.313	29.250	9.625	12.938	22.563	8.875	11.063	5.125
3	4	10	13.813	11.813	11.000	7.625	11.438	1.000	0.875	2.563	2.563	0.250	1.750	3.125	9.438	5.125	1.250	1.125	12.938	16.313	29.250	9.625	12.938	22.563	9.063	10.625	5.125
4	6	10	13.813	11.813	13.375	8.563	11.438	1.000	0.875	2.938	2.938	0.500	3.750	4.313	9.438	6.688	1.875	1.625	15.688	20.250	35.938	11.813	16.375	28.188	9.875	12.188	6.688
5	6	10	15.750	13.000	13.375	8.875	13.375	1.000	0.875	2.938	2.938	0.250	1.750	3.125	10.625	7.125	1.250	1.125	14.188	17.500	31.688	10.813	14.188	25.000	9.875	12.813	7.125
6	8	10	15.750	13.000	15.375	9.688	13.375	1.000	0.875	2.938	2.938	0.250	1.750	3.125	10.625	7.875	1.250	1.125	14.188	17.500	31.688	10.813	14.188	25.000	12.188	14.375	7.875
10	10	10	15.750	16.563	17.313	12.000	13.375	1.000	0.875	2.938	2.938	0.500	3.750	4.313	14.188	8.250	1.875	1.625	17.500	22.063	39.563	13.625	18.125	31.750	13.375	19.313	8.250
5	6	11	13.813	11.813	13.375	10.063	11.438	1.000	0.875	2.938	2.563	0.250	1.750	3.125	9.438	6.313	1.250	1.125	12.938	16.313	29.250	9.625	12.938	22.563	11.438	12.188	6.313
3	4	12	13.813	11.813	11.000	8.688	11.438	1.000	0.875	2.563	2.563	0.250	1.750	3.125	9.438	5.938	1.250	1.125	12.938	16.313	29.250	9.625	12.938	22.563	10.813	11.438	5.938
4	5	12	13.813	11.813	12.625	9.625	11.438	1.000	0.875	2.563	2.563	0.250	1.750	3.125	9.438	6.688	1.250	1.125	12.938	16.313	29.250	9.625	12.938	22.563	10.813	12.625	6.688
5	6	12	15.750	13.000	13.375	10.000	13.375	1.000	0.875	2.938	2.938	0.250	1.750	3.125	10.625	6.875	1.250	1.125	14.188	17.500	31.688	10.813	14.188	25.000	11.438	13.188	6.875
6	8	12	15.750	16.563	17.313	10.813	13.375	1.000	0.875	2.938	2.938	0.500	3.750	4.313	14.188	9.250	1.875	1.625	15.688	20.250	35.938	11.813	16.375	28.188	12.438	14.375	9.250
8	10	12	20.063	19.688	21.250	12.188	17.750	1.000	0.875	2.938	2.938	0.500	3.750	4.313	17.313	11.250	1.875	1.625	17.500	22.063	39.563	13.625	18.125	31.750	15.188	17.750	11.250
10	10	12	20.063	19.688	21.250	12.563	17.750	1.000	0.875	2.938	2.938	0.500	3.750	4.313	17.313	9.875	1.875	1.625	17.500	22.063	39.563	13.625	18.125	31.750	15.750	16.938	9.875
12	14	14	29.125	19.688	25.625	14.000	24.375	1.000	0.750	4.750	3.938	0.813	3.125	4.125	15.750	13.000	2.750	2.563	19.438	24.250	43.688	19.438	24.250	43.688	17.750	23.625	13.000
2	3	15	15.750	13.000	11.813	10.313	13.375	1.000	0.875	2.563	2.563	0.250	1.750	3.125	10.625	6.688	1.250	1.125	12.938	16.313	29.250	9.625	12.938	22.563	11.063	14.000	6.688
3	4	15	15.750	13.000	12.625	10.938	13.375	1.000	0.875	2.563	2.563	0.250	1.750	3.125	10.625	6.875	1.250	1.125	12.938	16.313	29.250	9.625	12.938	22.563	13.813	13.375	6.875
4	5	15	17.750	13.000	13.375	11.188	15.375	1.000	0.875	2.938	2.938	0.500	3.750	4.313	10.625	7.500	1.875	1.625	15.688	20.250	35.938	11.813	16.375	28.188	13.813	13.375	7.500
5	6	15	17.750	13.000	15.375	11.688	15.375	1.000	0.875	2.938	2.938	0.500	3.750	4.313	10.625	8.250	1.875	1.625	15.688	20.250	35.938	11.813	16.375	28.188	13.813	15.750	8.250
6	8	15	15.750	16.563	17.313	11.313	13.375	1.000	0.875	2.938	2.938	0.500	3.750	4.313	14.188	8.250	1.875	1.625	15.688	20.250	35.938	11.813	16.375	28.188	13.813	16.125	8.250
8	10	15	20.063	16.563	18.125	13.375	17.313	1.125	1.125	3.563	3.563	0.625	4.250	6.000	13.813	8.875	2.438	2.125	18.125	24.313	42.438	14.625	20.813	35.438	16.563	18.875	8.875
10	12	15	22.063	19.688	21.250	15.500	19.313	1.125	1.125	3.563	3.563	0.625	4.250	6.000	16.938	10.438	2.438	2.125	18.125	24.313	42.438	14.625	20.813	35.438	16.563	21.563	10.438
14	14	15	31.500	22.438	27.563	15.750	26.000	1.125	0.875	5.500	4.375	0.875	3.750	4.938	18.125	14.563	3.563	3.375	23.625	29.125	52.750	23.625	29.125	52.750	19.688	27.563	14.563
10	12	16	33.063	22.438	22.813	14.000	27.563	1.125	0.875	5.500	4.375	0.875	3.750	4.938	18.125	12.188	3.563	3.375	23.625	29.125	52.750	23.625	29.125	52.750	21.688	25.625	12.188
4	5	18	17.750	13.000	15.375	11.813	15.375	1.000	0.875	2.938	2.938	0.500	3.750	4.313	10.625	8.250	1.875	1.625	15.688	20.250	35.938	11.813	16.375	28.188	13.813	15.750	8.250
5	8	18	22.063	17.750	19.688	13.875	19.313	1.125	1.125	3.563	3.563	0.625	4.250	6.000	15.375	10.250	2.438	2.125	18.125	24.313	42.438	14.625	20.813	35.438	17.750	18.875	10.250
6	8	18	22.063	17.750	21.250	14.750	19.313	1.125	1.125	3.563	3.563	0.625	4.250	6.000	15.375	10.625	2.438	2.125	18.125	24.313	42.438	14.625	20.813	35.438	17.750	20.063	10.625
8	10	18	22.063	17.750	21.250	14.688	19.313	1.125	1.125	3.563	3.563	0.625	4.250	6.000	15.375	10.625	2.438	2.125	18.125	24.313	42.438	14.625	20.813	35.438	17.750	16.063	10.625
12	14	18	37.000	28.375	25.625	16.125	31.500	1.125	0.875	5.500	4.375	1.000	5.125	5.875	24.000	13.563	3.938	3.750	26.875	33.563	60.438	26.875	33.563	60.438	23.625	26.750	13.563
14	18	18	37.000	29.938	29.500	18.000	31.500	1.125	1.063	5.500	4.375	1.000	5.125	5.938	25.625	15.750	3.938	3.750	26.875	33.563	60.438	26.875	33.563	60.438	23.625	27.563	15.750
10	12	20	33.063	22.438	22.813	15.000	27.563	1.125	0.875	5.500	4.375	0.875	3.750	4.938	18.125	12.188	3.563	3.375	23.625	29.125	52.750	23.625	29.125	52.750	23.625	25.625	12.188
14	18	21	37.000	29.938	29.500	18.000	31.500	1.125	1.063	5.500	4.375	1.000	5.125	5.875	25.625	15.750	3.938	3.750	26.875	33.563	60.438	26.875	33.563	60.438	23.625	27.563	15.750
8	10	22	34.250	19.688	22.063	15.563	29.500	1.000	0.750	4.750	3.938	0.813	3.125	4.125	15.750	13.188	2.750	2.563	19.438	24.250	43.688	19.438	24.250	43.688	21.688	21.688	13.188
12	14	23	33.063	22.438	27.563	17.313	27.563	1.125	0.875	5.500	4.375	0.875	3.750	4.938	18.125	14.563	3.563	3.375	23.625	29.125	52.750	23.625	29.125	52.750	19.688	25.625	14.563
10	12	26	39.375	22.438	27.563	18.875	33.875	1.188	0.875	5.500	4.375	0.875	3.750	4.938	18.125	15.750	3.563	3.375	23.625	29.125	52.750	23.625	29.125	52.750	27.563	27.563	15.750

May 28, 2004

340 SERIES HD

AMERICAN-MARSH PUMPS

A WILO BRAND

DOUBLE SUCTION SPLITCASE PUMP ONLY

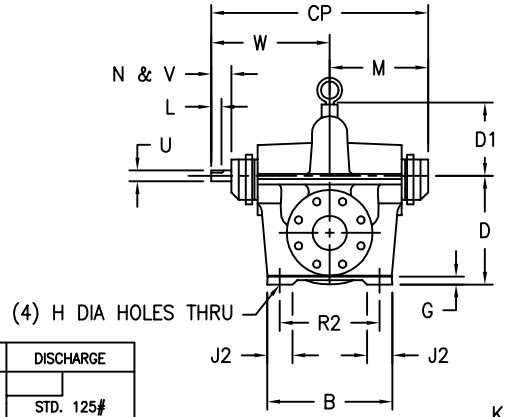

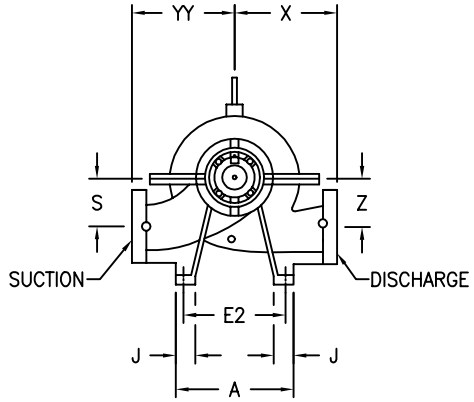

RIGHT HAND ROTATION
(STANDARD)

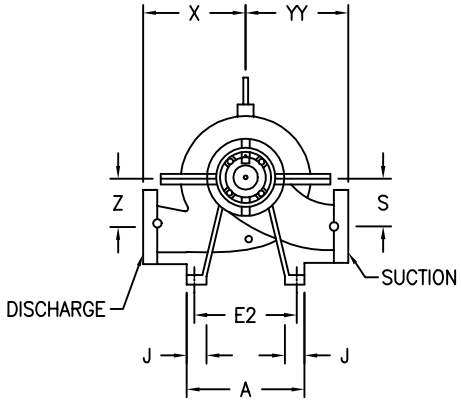

LEFT HAND ROTATION
(NON–STANDARD)

SUCTION	DISCHARGE
STD. 125# FLANGE	STD. 125# FLANGE
OPT. 250# FLANGE	OPT. 250# FLANGE

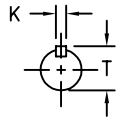

*ALL DIMENSIONS ARE IN INCHES AND ± 3/8.
*NOT FOR CONSTUCTION. UNLESS CERTIFIED BY ENGINEERING.

PUMP SIZE																			PACKED		PACKED	SEALED		SEALED			
DISCH	SUCT	CASE BORE	A	B	D	D1	E2	G	H	J	J2	K	L	N & V	R2	S	T	U	M	W	CP	M	W	CP	X	YY	Z
2 1/2	3	10	13.813	11.813	9.875	7.750	11.438	1.000	0.875	2.563	2.563	0.250	1.750	3.125	9.438	5.125	1.250	1.125	12.938	16.313	29.250	9.625	12.938	22.563	8.875	11.063	5.125
3	4	10	13.813	11.813	11.000	7.625	11.438	1.000	0.875	2.563	2.563	0.250	1.750	3.125	9.438	5.125	1.250	1.125	12.938	16.313	29.250	9.625	12.938	22.563	9.063	10.625	5.125
4	6	10	13.813	11.813	13.375	8.563	11.438	1.000	0.875	2.938	2.938	0.500	3.750	4.313	9.438	6.688	1.875	1.625	15.688	20.250	35.938	11.813	16.375	28.188	9.875	12.188	6.688
5	6	10	15.750	13.000	13.375	8.875	13.375	1.000	0.875	2.938	2.938	0.250	1.750	3.125	10.625	7.125	1.250	1.125	14.188	17.500	31.688	10.813	14.188	25.000	9.875	12.813	7.125
6	8	10	15.750	13.000	15.375	9.688	13.375	1.000	0.875	2.938	2.938	0.250	1.750	3.125	10.625	7.875	1.250	1.125	14.188	17.500	31.688	10.813	14.188	25.000	12.188	14.375	7.875
10	10	10	15.750	16.563	17.313	12.000	13.375	1.000	0.875	2.938	2.938	0.500	3.750	4.313	14.188	8.250	1.875	1.625	17.500	22.063	39.563	13.625	18.125	31.750	13.375	19.313	8.250
5	6	11	13.813	11.813	13.375	10.063	11.438	1.000	0.875	2.938	2.563	0.250	1.750	3.125	9.438	6.313	1.250	1.125	12.938	16.313	29.250	9.625	12.938	22.563	11.438	12.188	6.313
3	4	12	13.813	11.813	11.000	8.688	11.438	1.000	0.875	2.563	2.563	0.250	1.750	3.125	9.438	5.938	1.250	1.125	12.938	16.313	29.250	9.625	12.938	22.563	10.813	11.438	5.938
4	5	12	13.813	11.813	12.625	9.625	11.438	1.000	0.875	2.563	2.563	0.250	1.750	3.125	9.438	6.688	1.250	1.125	12.938	16.313	29.250	9.625	12.938	22.563	10.813	12.625	6.688
5	6	12	15.750	13.000	13.375	10.000	13.375	1.000	0.875	2.938	2.938	0.250	1.750	3.125	10.625	6.875	1.250	1.125	14.188	17.500	31.688	10.813	14.188	25.000	11.438	13.188	6.875
6	8	12	15.750	16.563	17.313	10.813	13.375	1.000	0.875	2.938	2.938	0.500	3.750	4.313	14.188	9.250	1.875	1.625	15.688	20.250	35.938	11.813	16.375	28.188	12.438	14.375	9.250
8	10	12	20.063	19.688	21.250	12.188	17.750	1.000	0.875	2.938	2.938	0.500	3.750	4.313	17.313	11.250	1.875	1.625	17.500	22.063	39.563	13.625	18.125	31.750	15.188	17.750	11.250
10	10	12	20.063	19.688	21.250	12.563	17.750	1.000	0.875	2.938	2.938	0.500	3.750	4.313	17.313	9.875	1.875	1.625	17.500	22.063	39.563	13.625	18.125	31.750	15.750	16.938	9.875
12	14	14	29.125	19.688	25.625	14.000	24.375	1.000	0.750	4.750	3.938	0.813	3.125	4.125	15.750	13.000	2.750	2.563	19.438	24.250	43.688	19.438	24.250	43.688	17.750	23.625	13.000
2	3	15	15.750	13.000	11.813	10.313	13.375	1.000	0.875	2.563	2.563	0.250	1.750	3.125	10.625	6.688	1.250	1.125	12.938	16.313	29.250	9.625	12.938	22.563	11.063	14.000	6.688
3	4	15	15.750	13.000	12.625	10.938	13.375	1.000	0.875	2.563	2.563	0.250	1.750	3.125	10.625	6.875	1.250	1.125	12.938	16.313	29.250	9.625	12.938	22.563	13.813	13.375	6.875
4	5	15	17.750	13.000	13.375	11.188	15.375	1.000	0.875	2.938	2.938	0.500	3.750	4.313	10.625	7.500	1.875	1.625	15.688	20.250	35.938	11.813	16.375	28.188	13.813	13.375	7.500
5	6	15	17.750	13.000	15.375	11.688	15.375	1.000	0.875	2.938	2.938	0.500	3.750	4.313	10.625	8.250	1.875	1.625	15.688	20.250	35.938	11.813	16.375	28.188	13.813	15.750	8.250
6	8	15	15.750	16.563	17.313	11.313	13.375	1.000	0.875	2.938	2.938	0.500	3.750	4.313	14.188	8.250	1.875	1.625	15.688	20.250	35.938	11.813	16.375	28.188	13.813	16.125	8.250
8	10	15	20.063	16.563	18.125	13.375	17.313	1.125	1.125	3.563	3.563	0.625	4.250	6.000	13.813	8.875	2.438	2.125	18.125	24.313	42.438	14.625	20.813	35.438	16.563	18.875	8.875
10	12	15	22.063	19.688	21.250	15.500	19.313	1.125	1.125	3.563	3.563	0.625	4.250	6.000	16.938	10.438	2.438	2.125	18.125	24.313	42.438	14.625	20.813	35.438	16.563	21.563	10.438
14	14	15	31.500	22.438	27.563	15.750	26.000	1.125	0.875	5.500	4.375	0.875	3.750	4.938	18.125	14.563	3.563	3.375	23.625	29.125	52.750	23.625	29.125	52.750	19.688	27.563	14.563
10	12	16	33.063	22.438	22.813	14.000	27.563	1.125	0.875	5.500	4.375	0.875	3.750	4.938	18.125	12.188	3.563	3.375	23.625	29.125	52.750	23.625	29.125	52.750	21.688	25.625	12.188
4	5	18	17.750	13.000	15.375	11.813	15.375	1.000	0.875	2.938	2.938	0.500	3.750	4.313	10.625	8.250	1.875	1.625	15.688	20.250	35.938	11.813	16.375	28.188	13.813	15.750	8.250
5	8	18	22.063	17.750	19.688	13.875	19.313	1.125	1.125	3.563	3.563	0.625	4.250	6.000	15.375	10.250	2.438	2.125	18.125	24.313	42.438	14.625	20.813	35.438	17.750	18.875	10.250
6	8	18	22.063	17.750	21.250	14.750	19.313	1.125	1.125	3.563	3.563	0.625	4.250	6.000	15.375	10.625	2.438	2.125	18.125	24.313	42.438	14.625	20.813	35.438	17.750	20.063	10.625
8	10	18	22.063	17.750	21.250	14.688	19.313	1.125	1.125	3.563	3.563	0.625	4.250	6.000	15.375	10.625	2.438	2.125	18.125	24.313	42.438	14.625	20.813	35.438	17.750	16.063	10.625
12	14	18	37.000	28.375	25.625	16.125	31.500	1.125	0.875	5.500	4.375	1.000	5.125	5.875	24.000	13.563	3.938	3.750	26.875	33.563	60.438	26.875	33.563	60.438	23.625	26.750	13.563
14	18	18	37.000	29.938	29.500	18.000	31.500	1.125	1.063	5.500	4.375	1.000	5.125	5.938	25.625	15.750	3.938	3.750	26.875	33.563	60.438	26.875	33.563	60.438	23.625	27.563	15.750
10	12	20	33.063	22.438	22.813	15.000	27.563	1.125	0.875	5.500	4.375	0.875	3.750	4.938	18.125	12.188	3.563	3.375	23.625	29.125	52.750	23.625	29.125	52.750	23.625	25.625	12.188
14	18	21	37.000	29.938	29.500	18.000	31.500	1.125	1.063	5.500	4.375	1.000	5.125	5.875	25.625	15.750	3.938	3.750	26.875	33.563	60.438	26.875	33.563	60.438	23.625	27.563	15.750
8	10	22	34.250	19.688	22.063	15.563	29.500	1.000	0.750	4.750	3.938	0.813	3.125	4.125	15.750	13.188	2.750	2.563	19.438	24.250	43.688	19.438	24.250	43.688	21.688	21.688	13.188
12	14	23	33.063	22.438	27.563	17.313	27.563	1.125	0.875	5.500	4.375	0.875	3.750	4.938	18.125	14.563	3.563	3.375	23.625	29.125	52.750	23.625	29.125	52.750	19.688	25.625	14.563
10	12	26	39.375	22.438	27.563	18.875	33.875	1.188	0.875	5.500	4.375	0.875	3.750	4.938	18.125	15.750	3.563	3.375	23.625	29.125	52.750	23.625	29.125	52.750	27.563	27.563	15.750

May 28, 2004

340 SERIES HD

AMERICAN-MARSH PUMPS

A WILO BRAND

DOUBLE SUCTION SPLITCASE PUMP ONLY

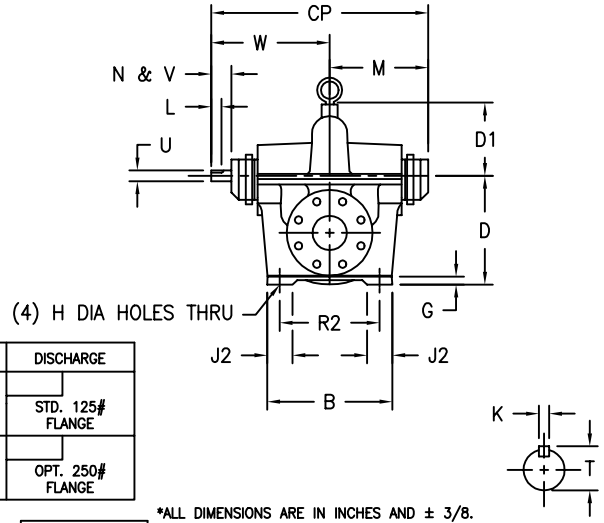

SUCTION	DISCHARGE
STD. 125# FLANGE	STD. 125# FLANGE
OPT. 250# FLANGE	OPT. 250# FLANGE

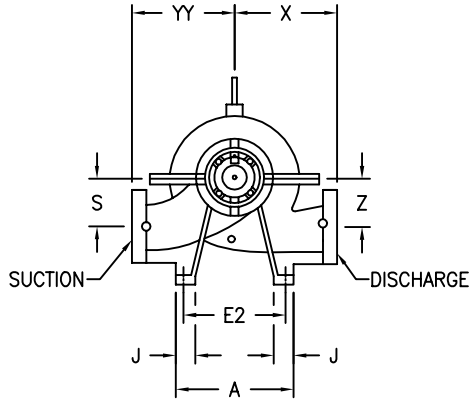

RIGHT HAND ROTATION
(STANDARD)

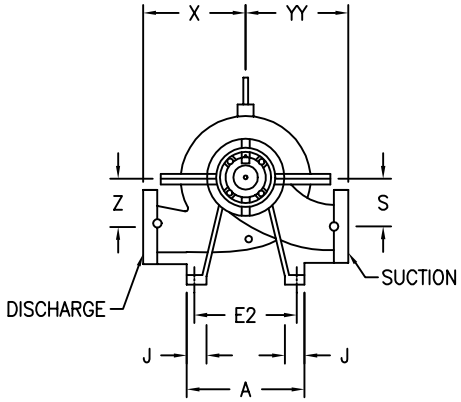

LEFT HAND ROTATION
(NON–STANDARD)

*ALL DIMENSIONS ARE IN INCHES AND ± 3/8.
*NOT FOR CONSTUCTION. UNLESS CERTIFIED BY ENGINEERING.

PUMP SIZE																			PACKED		PACKED	SEALED		SEALED			
DISCH	SUCT	CASE BORE	A	B	D	D1	E2	G	H	J	J2	K	L	N & V	R2	S	T	U	M	W	CP	M	W	CP	X	YY	Z
2 1/2	3	10	13.813	11.813	9.875	7.750	11.438	1.000	0.875	2.563	2.563	0.250	1.750	3.125	9.438	5.125	1.250	1.125	12.938	16.313	29.250	9.625	12.938	22.563	8.875	11.063	5.125
3	4	10	13.813	11.813	11.000	7.625	11.438	1.000	0.875	2.563	2.563	0.250	1.750	3.125	9.438	5.125	1.250	1.125	12.938	16.313	29.250	9.625	12.938	22.563	9.063	10.625	5.125
4	6	10	13.813	11.813	13.375	8.563	11.438	1.000	0.875	2.938	2.938	0.500	3.750	4.313	9.438	6.688	1.875	1.625	15.688	20.250	35.938	11.813	16.375	28.188	9.875	12.188	6.688
5	6	10	15.750	13.000	13.375	8.875	13.375	1.000	0.875	2.938	2.938	0.250	1.750	3.125	10.625	7.125	1.250	1.125	14.188	17.500	31.688	10.813	14.188	25.000	9.875	12.813	7.125
6	8	10	15.750	13.000	15.375	9.688	13.375	1.000	0.875	2.938	2.938	0.250	1.750	3.125	10.625	7.875	1.250	1.125	14.188	17.500	31.688	10.813	14.188	25.000	12.188	14.375	7.875
10	10	10	15.750	16.563	17.313	12.000	13.375	1.000	0.875	2.938	2.938	0.500	3.750	4.313	14.188	8.250	1.875	1.625	17.500	22.063	39.563	13.625	18.125	31.750	13.375	19.313	8.250
5	6	11	13.813	11.813	13.375	10.063	11.438	1.000	0.875	2.938	2.563	0.250	1.750	3.125	9.438	6.313	1.250	1.125	12.938	16.313	29.250	9.625	12.938	22.563	11.438	12.188	6.313
3	4	12	13.813	11.813	11.000	8.688	11.438	1.000	0.875	2.563	2.563	0.250	1.750	3.125	9.438	5.938	1.250	1.125	12.938	16.313	29.250	9.625	12.938	22.563	10.813	11.438	5.938
4	5	12	13.813	11.813	12.625	9.625	11.438	1.000	0.875	2.563	2.563	0.250	1.750	3.125	9.438	6.688	1.250	1.125	12.938	16.313	29.250	9.625	12.938	22.563	10.813	12.625	6.688
5	6	12	15.750	13.000	13.375	10.000	13.375	1.000	0.875	2.938	2.938	0.250	1.750	3.125	10.625	6.875	1.250	1.125	14.188	17.500	31.688	10.813	14.188	25.000	11.438	13.188	6.875
6	8	12	15.750	16.563	17.313	10.813	13.375	1.000	0.875	2.938	2.938	0.500	3.750	4.313	14.188	9.250	1.875	1.625	15.688	20.250	35.938	11.813	16.375	28.188	12.438	14.375	9.250
8	10	12	20.063	19.688	21.250	12.188	17.750	1.000	0.875	2.938	2.938	0.500	3.750	4.313	17.313	11.250	1.875	1.625	17.500	22.063	39.563	13.625	18.125	31.750	15.188	17.750	11.250
10	10	12	20.063	19.688	21.250	12.563	17.750	1.000	0.875	2.938	2.938	0.500	3.750	4.313	17.313	9.875	1.875	1.625	17.500	22.063	39.563	13.625	18.125	31.750	15.750	16.938	9.875
12	14	14	29.125	19.688	25.625	14.000	24.375	1.000	0.750	4.750	3.938	0.813	3.125	4.125	15.750	13.000	2.750	2.563	19.438	24.250	43.688	19.438	24.250	43.688	17.750	23.625	13.000
2	3	15	15.750	13.000	11.813	10.313	13.375	1.000	0.875	2.563	2.563	0.250	1.750	3.125	10.625	6.688	1.250	1.125	12.938	16.313	29.250	9.625	12.938	22.563	11.063	14.000	6.688
3	4	15	15.750	13.000	12.625	10.938	13.375	1.000	0.875	2.563	2.563	0.250	1.750	3.125	10.625	6.875	1.250	1.125	12.938	16.313	29.250	9.625	12.938	22.563	13.813	13.375	6.875
4	5	15	17.750	13.000	13.375	11.188	15.375	1.000	0.875	2.938	2.938	0.500	3.750	4.313	10.625	7.500	1.875	1.625	15.688	20.250	35.938	11.813	16.375	28.188	13.813	13.375	7.500
5	6	15	17.750	13.000	15.375	11.688	15.375	1.000	0.875	2.938	2.938	0.500	3.750	4.313	10.625	8.250	1.875	1.625	15.688	20.250	35.938	11.813	16.375	28.188	13.813	15.750	8.250
6	8	15	15.750	16.563	17.313	11.313	13.375	1.000	0.875	2.938	2.938	0.500	3.750	4.313	14.188	8.250	1.875	1.625	15.688	20.250	35.938	11.813	16.375	28.188	13.813	16.125	8.250
8	10	15	20.063	16.563	18.125	13.375	17.313	1.125	1.125	3.563	3.563	0.625	4.250	6.000	13.813	8.875	2.438	2.125	18.125	24.313	42.438	14.625	20.813	35.438	16.563	18.875	8.875
10	12	15	22.063	19.688	21.250	15.500	19.313	1.125	1.125	3.563	3.563	0.625	4.250	6.000	16.938	10.438	2.438	2.125	18.125	24.313	42.438	14.625	20.813	35.438	16.563	21.563	10.438
14	14	15	31.500	22.438	27.563	15.750	26.000	1.125	0.875	5.500	4.375	0.875	3.750	4.938	18.125	14.563	3.563	3.375	23.625	29.125	52.750	23.625	29.125	52.750	19.688	27.563	14.563
10	12	16	33.063	22.438	22.813	14.000	27.563	1.125	0.875	5.500	4.375	0.875	3.750	4.938	18.125	12.188	3.563	3.375	23.625	29.125	52.750	23.625	29.125	52.750	21.688	25.625	12.188
4	5	18	17.750	13.000	15.375	11.813	15.375	1.000	0.875	2.938	2.938	0.500	3.750	4.313	10.625	8.250	1.875	1.625	15.688	20.250	35.938	11.813	16.375	28.188	13.813	15.750	8.250
5	8	18	22.063	17.750	19.688	13.875	19.313	1.125	1.125	3.563	3.563	0.625	4.250	6.000	15.375	10.250	2.438	2.125	18.125	24.313	42.438	14.625	20.813	35.438	17.750	18.875	10.250
6	8	18	22.063	17.750	21.250	14.750	19.313	1.125	1.125	3.563	3.563	0.625	4.250	6.000	15.375	10.625	2.438	2.125	18.125	24.313	42.438	14.625	20.813	35.438	17.750	20.063	10.625
8	10	18	22.063	17.750	21.250	14.688	19.313	1.125	1.125	3.563	3.563	0.625	4.250	6.000	15.375	10.625	2.438	2.125	18.125	24.313	42.438	14.625	20.813	35.438	17.750	16.063	10.625
12	14	18	37.000	28.375	25.625	16.125	31.500	1.125	0.875	5.500	4.375	1.000	5.125	5.875	24.000	13.563	3.938	3.750	26.875	33.563	60.438	26.875	33.563	60.438	23.625	26.750	13.563
14	18	18	37.000	29.938	29.500	18.000	31.500	1.125	1.063	5.500	4.375	1.000	5.125	5.938	25.625	15.750	3.938	3.750	26.875	33.563	60.438	26.875	33.563	60.438	23.625	27.563	15.750
10	12	20	33.063	22.438	22.813	15.000	27.563	1.125	0.875	5.500	4.375	0.875	3.750	4.938	18.125	12.188	3.563	3.375	23.625	29.125	52.750	23.625	29.125	52.750	23.625	25.625	12.188
14	18	21	37.000	29.938	29.500	18.000	31.500	1.125	1.063	5.500	4.375	1.000	5.125	5.875	25.625	15.750	3.938	3.750	26.875	33.563	60.438	26.875	33.563	60.438	23.625	27.563	15.750
8	10	22	34.250	19.688	22.063	15.563	29.500	1.000	0.750	4.750	3.938	0.813	3.125	4.125	15.750	13.188	2.750	2.563	19.438	24.250	43.688	19.438	24.250	43.688	21.688	21.688	13.188
12	14	23	33.063	22.438	27.563	17.313	27.563	1.125	0.875	5.500	4.375	0.875	3.750	4.938	18.125	14.563	3.563	3.375	23.625	29.125	52.750	23.625	29.125	52.750	19.688	25.625	14.563
10	12	26	39.375	22.438	27.563	18.875	33.875	1.188	0.875	5.500	4.375	0.875	3.750	4.938	18.125	15.750	3.563	3.375	23.625	29.125	52.750	23.625	29.125	52.750	27.563	27.563	15.750

May 28, 2004

340 SERIES HD

AMERICAN-MARSH PUMPS

A WILO BRAND

DOUBLE SUCTION SPLITCASE PUMP ONLY

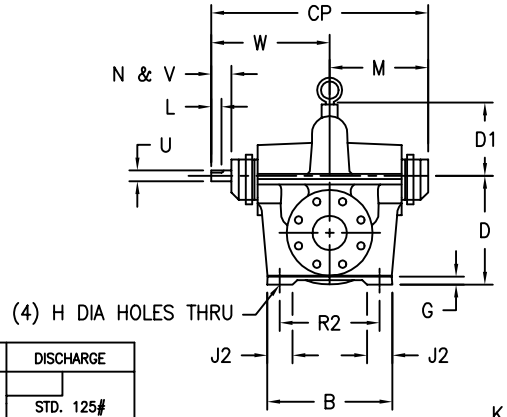

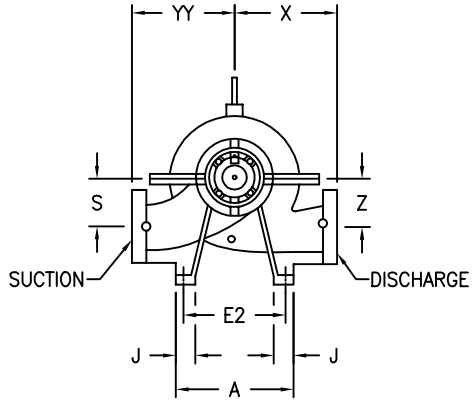

RIGHT HAND ROTATION
(STANDARD)

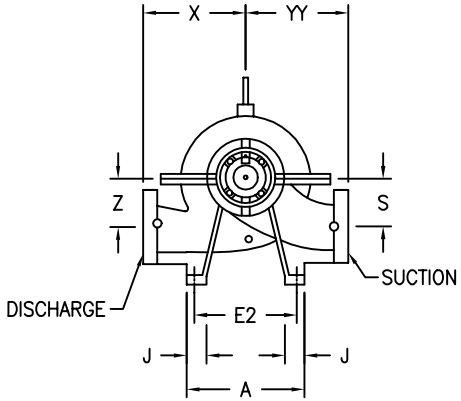

LEFT HAND ROTATION
(NON–STANDARD)

SUCTION	DISCHARGE
STD. 125# FLANGE	STD. 125# FLANGE
OPT. 250# FLANGE	OPT. 250# FLANGE

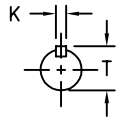

*ALL DIMENSIONS ARE IN INCHES AND ± 3/8.
*NOT FOR CONSTUCTION. UNLESS CERTIFIED BY ENGINEERING.

PUMP SIZE																			PACKED		PACKED	SEALED		SEALED			
DISCH	SUCT	CASE BORE	A	B	D	D1	E2	G	H	J	J2	K	L	N & V	R2	S	T	U	M	W	CP	M	W	CP	X	YY	Z
2 1/2	3	10	13.813	11.813	9.875	7.750	11.438	1.000	0.875	2.563	2.563	0.250	1.750	3.125	9.438	5.125	1.250	1.125	12.938	16.313	29.250	9.625	12.938	22.563	8.875	11.063	5.125
3	4	10	13.813	11.813	11.000	7.625	11.438	1.000	0.875	2.563	2.563	0.250	1.750	3.125	9.438	5.125	1.250	1.125	12.938	16.313	29.250	9.625	12.938	22.563	9.063	10.625	5.125
4	6	10	13.813	11.813	13.375	8.563	11.438	1.000	0.875	2.938	2.938	0.500	3.750	4.313	9.438	6.688	1.875	1.625	15.688	20.250	35.938	11.813	16.375	28.188	9.875	12.188	6.688
5	6	10	15.750	13.000	13.375	8.875	13.375	1.000	0.875	2.938	2.938	0.250	1.750	3.125	10.625	7.125	1.250	1.125	14.188	17.500	31.688	10.813	14.188	25.000	9.875	12.813	7.125
6	8	10	15.750	13.000	15.375	9.688	13.375	1.000	0.875	2.938	2.938	0.250	1.750	3.125	10.625	7.875	1.250	1.125	14.188	17.500	31.688	10.813	14.188	25.000	12.188	14.375	7.875
10	10	10	15.750	16.563	17.313	12.000	13.375	1.000	0.875	2.938	2.938	0.500	3.750	4.313	14.188	8.250	1.875	1.625	17.500	22.063	39.563	13.625	18.125	31.750	13.375	19.313	8.250
5	6	11	13.813	11.813	13.375	10.063	11.438	1.000	0.875	2.938	2.563	0.250	1.750	3.125	9.438	6.313	1.250	1.125	12.938	16.313	29.250	9.625	12.938	22.563	11.438	12.188	6.313
3	4	12	13.813	11.813	11.000	8.688	11.438	1.000	0.875	2.563	2.563	0.250	1.750	3.125	9.438	5.938	1.250	1.125	12.938	16.313	29.250	9.625	12.938	22.563	10.813	11.438	5.938
4	5	12	13.813	11.813	12.625	9.625	11.438	1.000	0.875	2.563	2.563	0.250	1.750	3.125	9.438	6.688	1.250	1.125	12.938	16.313	29.250	9.625	12.938	22.563	10.813	12.625	6.688
5	6	12	15.750	13.000	13.375	10.000	13.375	1.000	0.875	2.938	2.938	0.250	1.750	3.125	10.625	6.875	1.250	1.125	14.188	17.500	31.688	10.813	14.188	25.000	11.438	13.188	6.875
6	8	12	15.750	16.563	17.313	10.813	13.375	1.000	0.875	2.938	2.938	0.500	3.750	4.313	14.188	9.250	1.875	1.625	15.688	20.250	35.938	11.813	16.375	28.188	12.438	14.375	9.250
8	10	12	20.063	19.688	21.250	12.188	17.750	1.000	0.875	2.938	2.938	0.500	3.750	4.313	17.313	11.250	1.875	1.625	17.500	22.063	39.563	13.625	18.125	31.750	15.188	17.750	11.250
10	10	12	20.063	19.688	21.250	12.563	17.750	1.000	0.875	2.938	2.938	0.500	3.750	4.313	17.313	9.875	1.875	1.625	17.500	22.063	39.563	13.625	18.125	31.750	15.750	16.938	9.875
12	14	14	29.125	19.688	25.625	14.000	24.375	1.000	0.750	4.750	3.938	0.813	3.125	4.125	15.750	13.000	2.750	2.563	19.438	24.250	43.688	19.438	24.250	43.688	17.750	23.625	13.000
2	3	15	15.750	13.000	11.813	10.313	13.375	1.000	0.875	2.563	2.563	0.250	1.750	3.125	10.625	6.688	1.250	1.125	12.938	16.313	29.250	9.625	12.938	22.563	11.063	14.000	6.688
3	4	15	15.750	13.000	12.625	10.938	13.375	1.000	0.875	2.563	2.563	0.250	1.750	3.125	10.625	6.875	1.250	1.125	12.938	16.313	29.250	9.625	12.938	22.563	13.813	13.375	6.875
4	5	15	17.750	13.000	13.375	11.188	15.375	1.000	0.875	2.938	2.938	0.500	3.750	4.313	10.625	7.500	1.875	1.625	15.688	20.250	35.938	11.813	16.375	28.188	13.813	13.375	7.500
5	6	15	17.750	13.000	15.375	11.688	15.375	1.000	0.875	2.938	2.938	0.500	3.750	4.313	10.625	8.250	1.875	1.625	15.688	20.250	35.938	11.813	16.375	28.188	13.813	15.750	8.250
6	8	15	15.750	16.563	17.313	11.313	13.375	1.000	0.875	2.938	2.938	0.500	3.750	4.313	14.188	8.250	1.875	1.625	15.688	20.250	35.938	11.813	16.375	28.188	13.813	16.125	8.250
8	10	15	20.063	16.563	18.125	13.375	17.313	1.125	1.125	3.563	3.563	0.625	4.250	6.000	13.813	8.875	2.438	2.125	18.125	24.313	42.438	14.625	20.813	35.438	16.563	18.875	8.875
10	12	15	22.063	19.688	21.250	15.500	19.313	1.125	1.125	3.563	3.563	0.625	4.250	6.000	16.938	10.438	2.438	2.125	18.125	24.313	42.438	14.625	20.813	35.438	16.563	21.563	10.438
14	14	15	31.500	22.438	27.563	15.750	26.000	1.125	0.875	5.500	4.375	0.875	3.750	4.938	18.125	14.563	3.563	3.375	23.625	29.125	52.750	23.625	29.125	52.750	19.688	27.563	14.563
10	12	16	33.063	22.438	22.813	14.000	27.563	1.125	0.875	5.500	4.375	0.875	3.750	4.938	18.125	12.188	3.563	3.375	23.625	29.125	52.750	23.625	29.125	52.750	21.688	25.625	12.188
4	5	18	17.750	13.000	15.375	11.813	15.375	1.000	0.875	2.938	2.938	0.500	3.750	4.313	10.625	8.250	1.875	1.625	15.688	20.250	35.938	11.813	16.375	28.188	13.813	15.750	8.250
5	8	18	22.063	17.750	19.688	13.875	19.313	1.125	1.125	3.563	3.563	0.625	4.250	6.000	15.375	10.250	2.438	2.125	18.125	24.313	42.438	14.625	20.813	35.438	17.750	18.875	10.250
6	8	18	22.063	17.750	21.250	14.750	19.313	1.125	1.125	3.563	3.563	0.625	4.250	6.000	15.375	10.625	2.438	2.125	18.125	24.313	42.438	14.625	20.813	35.438	17.750	20.063	10.625
8	10	18	22.063	17.750	21.250	14.688	19.313	1.125	1.125	3.563	3.563	0.625	4.250	6.000	15.375	10.625	2.438	2.125	18.125	24.313	42.438	14.625	20.813	35.438	17.750	16.063	10.625
12	14	18	37.000	28.375	25.625	16.125	31.500	1.125	0.875	5.500	4.375	1.000	5.125	5.875	24.000	13.563	3.938	3.750	26.875	33.563	60.438	26.875	33.563	60.438	23.625	26.750	13.563
14	18	18	37.000	29.938	29.500	18.000	31.500	1.125	1.063	5.500	4.375	1.000	5.125	5.938	25.625	15.750	3.938	3.750	26.875	33.563	60.438	26.875	33.563	60.438	23.625	27.563	15.750
10	12	20	33.063	22.438	22.813	15.000	27.563	1.125	0.875	5.500	4.375	0.875	3.750	4.938	18.125	12.188	3.563	3.375	23.625	29.125	52.750	23.625	29.125	52.750	23.625	25.625	12.188
14	18	21	37.000	29.938	29.500	18.000	31.500	1.125	1.063	5.500	4.375	1.000	5.125	5.875	25.625	15.750	3.938	3.750	26.875	33.563	60.438	26.875	33.563	60.438	23.625	27.563	15.750
8	10	22	34.250	19.688	22.063	15.563	29.500	1.000	0.750	4.750	3.938	0.813	3.125	4.125	15.750	13.188	2.750	2.563	19.438	24.250	43.688	19.438	24.250	43.688	21.688	21.688	13.188
12	14	23	33.063	22.438	27.563	17.313	27.563	1.125	0.875	5.500	4.375	0.875	3.750	4.938	18.125	14.563	3.563	3.375	23.625	29.125	52.750	23.625	29.125	52.750	19.688	25.625	14.563
10	12	26	39.375	22.438	27.563	18.875	33.875	1.188	0.875	5.500	4.375	0.875	3.750	4.938	18.125	15.750	3.563	3.375	23.625	29.125	52.750	23.625	29.125	52.750	27.563	27.563	15.750

May 28, 2004

340 SERIES HD

AMERICAN-MARSH PUMPS

A WILO BRAND

DOUBLE SUCTION SPLITCASE PUMP ONLY

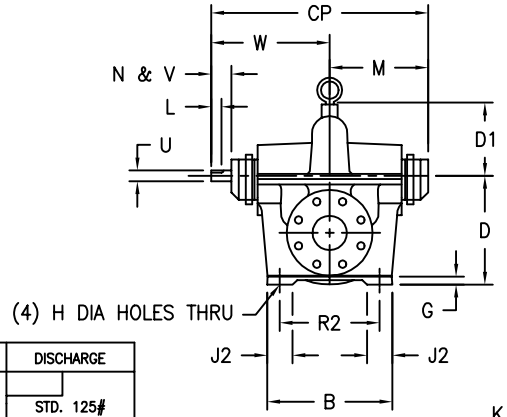

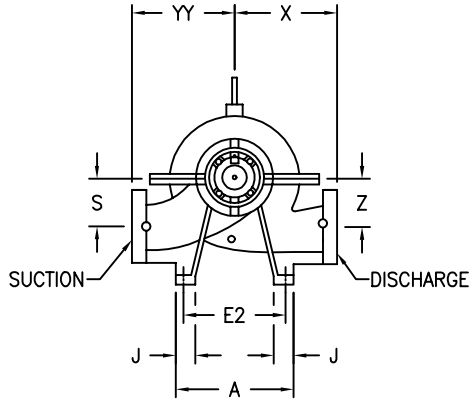

RIGHT HAND ROTATION
(STANDARD)

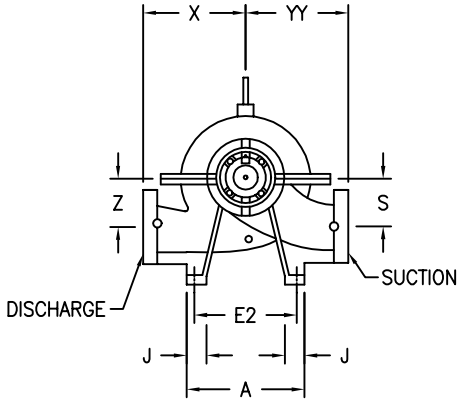

LEFT HAND ROTATION
(NON–STANDARD)

SUCTION	DISCHARGE
STD. 125# FLANGE	STD. 125# FLANGE
OPT. 250# FLANGE	OPT. 250# FLANGE

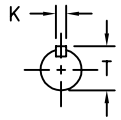

*ALL DIMENSIONS ARE IN INCHES AND ± 3/8.
*NOT FOR CONSTUCTION. UNLESS CERTIFIED BY ENGINEERING.

PUMP SIZE																			PACKED		PACKED	SEALED		SEALED			
DISCH	SUCT	CASE BORE	A	B	D	D1	E2	G	H	J	J2	K	L	N & V	R2	S	T	U	M	W	CP	M	W	CP	X	YY	Z
2 1/2	3	10	13.813	11.813	9.875	7.750	11.438	1.000	0.875	2.563	2.563	0.250	1.750	3.125	9.438	5.125	1.250	1.125	12.938	16.313	29.250	9.625	12.938	22.563	8.875	11.063	5.125
3	4	10	13.813	11.813	11.000	7.625	11.438	1.000	0.875	2.563	2.563	0.250	1.750	3.125	9.438	5.125	1.250	1.125	12.938	16.313	29.250	9.625	12.938	22.563	9.063	10.625	5.125
4	6	10	13.813	11.813	13.375	8.563	11.438	1.000	0.875	2.938	2.938	0.500	3.750	4.313	9.438	6.688	1.875	1.625	15.688	20.250	35.938	11.813	16.375	28.188	9.875	12.188	6.688
5	6	10	15.750	13.000	13.375	8.875	13.375	1.000	0.875	2.938	2.938	0.250	1.750	3.125	10.625	7.125	1.250	1.125	14.188	17.500	31.688	10.813	14.188	25.000	9.875	12.813	7.125
6	8	10	15.750	13.000	15.375	9.688	13.375	1.000	0.875	2.938	2.938	0.250	1.750	3.125	10.625	7.875	1.250	1.125	14.188	17.500	31.688	10.813	14.188	25.000	12.188	14.375	7.875
10	10	10	15.750	16.563	17.313	12.000	13.375	1.000	0.875	2.938	2.938	0.500	3.750	4.313	14.188	8.250	1.875	1.625	17.500	22.063	39.563	13.625	18.125	31.750	13.375	19.313	8.250
5	6	11	13.813	11.813	13.375	10.063	11.438	1.000	0.875	2.938	2.563	0.250	1.750	3.125	9.438	6.313	1.250	1.125	12.938	16.313	29.250	9.625	12.938	22.563	11.438	12.188	6.313
3	4	12	13.813	11.813	11.000	8.688	11.438	1.000	0.875	2.563	2.563	0.250	1.750	3.125	9.438	5.938	1.250	1.125	12.938	16.313	29.250	9.625	12.938	22.563	10.813	11.438	5.938
4	5	12	13.813	11.813	12.625	9.625	11.438	1.000	0.875	2.563	2.563	0.250	1.750	3.125	9.438	6.688	1.250	1.125	12.938	16.313	29.250	9.625	12.938	22.563	10.813	12.625	6.688
5	6	12	15.750	13.000	13.375	10.000	13.375	1.000	0.875	2.938	2.938	0.250	1.750	3.125	10.625	6.875	1.250	1.125	14.188	17.500	31.688	10.813	14.188	25.000	11.438	13.188	6.875
6	8	12	15.750	16.563	17.313	10.813	13.375	1.000	0.875	2.938	2.938	0.500	3.750	4.313	14.188	9.250	1.875	1.625	15.688	20.250	35.938	11.813	16.375	28.188	12.438	14.375	9.250
8	10	12	20.063	19.688	21.250	12.188	17.750	1.000	0.875	2.938	2.938	0.500	3.750	4.313	17.313	11.250	1.875	1.625	17.500	22.063	39.563	13.625	18.125	31.750	15.188	17.750	11.250
10	10	12	20.063	19.688	21.250	12.563	17.750	1.000	0.875	2.938	2.938	0.500	3.750	4.313	17.313	9.875	1.875	1.625	17.500	22.063	39.563	13.625	18.125	31.750	15.750	16.938	9.875
12	14	14	29.125	19.688	25.625	14.000	24.375	1.000	0.750	4.750	3.938	0.813	3.125	4.125	15.750	13.000	2.750	2.563	19.438	24.250	43.688	19.438	24.250	43.688	17.750	23.625	13.000
2	3	15	15.750	13.000	11.813	10.313	13.375	1.000	0.875	2.563	2.563	0.250	1.750	3.125	10.625	6.688	1.250	1.125	12.938	16.313	29.250	9.625	12.938	22.563	11.063	14.000	6.688
3	4	15	15.750	13.000	12.625	10.938	13.375	1.000	0.875	2.563	2.563	0.250	1.750	3.125	10.625	6.875	1.250	1.125	12.938	16.313	29.250	9.625	12.938	22.563	13.813	13.375	6.875
4	5	15	17.750	13.000	13.375	11.188	15.375	1.000	0.875	2.938	2.938	0.500	3.750	4.313	10.625	7.500	1.875	1.625	15.688	20.250	35.938	11.813	16.375	28.188	13.813	13.375	7.500
5	6	15	17.750	13.000	15.375	11.688	15.375	1.000	0.875	2.938	2.938	0.500	3.750	4.313	10.625	8.250	1.875	1.625	15.688	20.250	35.938	11.813	16.375	28.188	13.813	15.750	8.250
6	8	15	15.750	16.563	17.313	11.313	13.375	1.000	0.875	2.938	2.938	0.500	3.750	4.313	14.188	8.250	1.875	1.625	15.688	20.250	35.938	11.813	16.375	28.188	13.813	16.125	8.250
8	10	15	20.063	16.563	18.125	13.375	17.313	1.125	1.125	3.563	3.563	0.625	4.250	6.000	13.813	8.875	2.438	2.125	18.125	24.313	42.438	14.625	20.813	35.438	16.563	18.875	8.875
10	12	15	22.063	19.688	21.250	15.500	19.313	1.125	1.125	3.563	3.563	0.625	4.250	6.000	16.938	10.438	2.438	2.125	18.125	24.313	42.438	14.625	20.813	35.438	16.563	21.563	10.438
14	14	15	31.500	22.438	27.563	15.750	26.000	1.125	0.875	5.500	4.375	0.875	3.750	4.938	18.125	14.563	3.563	3.375	23.625	29.125	52.750	23.625	29.125	52.750	19.688	27.563	14.563
10	12	16	33.063	22.438	22.813	14.000	27.563	1.125	0.875	5.500	4.375	0.875	3.750	4.938	18.125	12.188	3.563	3.375	23.625	29.125	52.750	23.625	29.125	52.750	21.688	25.625	12.188
4	5	18	17.750	13.000	15.375	11.813	15.375	1.000	0.875	2.938	2.938	0.500	3.750	4.313	10.625	8.250	1.875	1.625	15.688	20.250	35.938	11.813	16.375	28.188	13.813	15.750	8.250
5	8	18	22.063	17.750	19.688	13.875	19.313	1.125	1.125	3.563	3.563	0.625	4.250	6.000	15.375	10.250	2.438	2.125	18.125	24.313	42.438	14.625	20.813	35.438	17.750	18.875	10.250
6	8	18	22.063	17.750	21.250	14.750	19.313	1.125	1.125	3.563	3.563	0.625	4.250	6.000	15.375	10.625	2.438	2.125	18.125	24.313	42.438	14.625	20.813	35.438	17.750	20.063	10.625
8	10	18	22.063	17.750	21.250	14.688	19.313	1.125	1.125	3.563	3.563	0.625	4.250	6.000	15.375	10.625	2.438	2.125	18.125	24.313	42.438	14.625	20.813	35.438	17.750	16.063	10.625
12	14	18	37.000	28.375	25.625	16.125	31.500	1.125	0.875	5.500	4.375	1.000	5.125	5.875	24.000	13.563	3.938	3.750	26.875	33.563	60.438	26.875	33.563	60.438	23.625	26.750	13.563
14	18	18	37.000	29.938	29.500	18.000	31.500	1.125	1.063	5.500	4.375	1.000	5.125	5.938	25.625	15.750	3.938	3.750	26.875	33.563	60.438	26.875	33.563	60.438	23.625	27.563	15.750
10	12	20	33.063	22.438	22.813	15.000	27.563	1.125	0.875	5.500	4.375	0.875	3.750	4.938	18.125	12.188	3.563	3.375	23.625	29.125	52.750	23.625	29.125	52.750	23.625	25.625	12.188
14	18	21	37.000	29.938	29.500	18.000	31.500	1.125	1.063	5.500	4.375	1.000	5.125	5.875	25.625	15.750	3.938	3.750	26.875	33.563	60.438	26.875	33.563	60.438	23.625	27.563	15.750
8	10	22	34.250	19.688	22.063	15.563	29.500	1.000	0.750	4.750	3.938	0.813	3.125	4.125	15.750	13.188	2.750	2.563	19.438	24.250	43.688	19.438	24.250	43.688	21.688	21.688	13.188
12	14	23	33.063	22.438	27.563	17.313	27.563	1.125	0.875	5.500	4.375	0.875	3.750	4.938	18.125	14.563	3.563	3.375	23.625	29.125	52.750	23.625	29.125	52.750	19.688	25.625	14.563
10	12	26	39.375	22.438	27.563	18.875	33.875	1.188	0.875	5.500	4.375	0.875	3.750	4.938	18.125	15.750	3.563	3.375	23.625	29.125	52.750	23.625	29.125	52.750	27.563	27.563	15.750

May 28, 2004

340 SERIES HD

AMERICAN-MARSH PUMPS

A WILO BRAND

DOUBLE SUCTION SPLITCASE PUMP ONLY

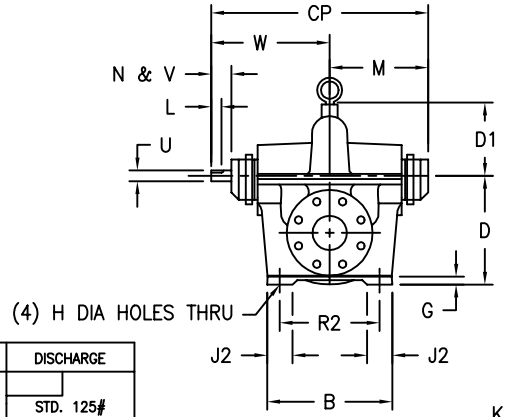

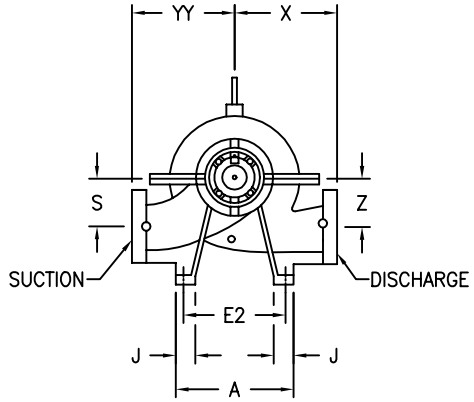

RIGHT HAND ROTATION
(STANDARD)

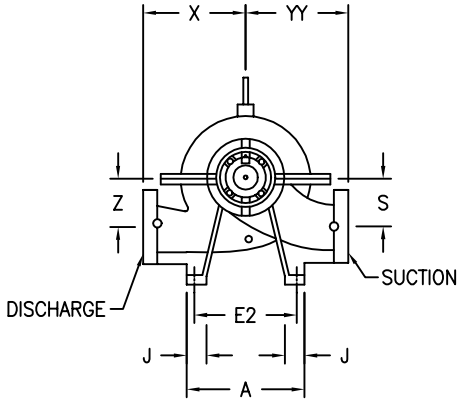

LEFT HAND ROTATION
(NON–STANDARD)

SUCTION	DISCHARGE
STD. 125# FLANGE	STD. 125# FLANGE
OPT. 250# FLANGE	OPT. 250# FLANGE

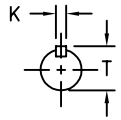

*ALL DIMENSIONS ARE IN INCHES AND ± 3/8.
*NOT FOR CONSTUCTION. UNLESS CERTIFIED BY ENGINEERING.

PUMP SIZE																			PACKED		PACKED	SEALED		SEALED			
DISCH	SUCT	CASE BORE	A	B	D	D1	E2	G	H	J	J2	K	L	N & V	R2	S	T	U	M	W	CP	M	W	CP	X	YY	Z
2 1/2	3	10	13.813	11.813	9.875	7.750	11.438	1.000	0.875	2.563	2.563	0.250	1.750	3.125	9.438	5.125	1.250	1.125	12.938	16.313	29.250	9.625	12.938	22.563	8.875	11.063	5.125
3	4	10	13.813	11.813	11.000	7.625	11.438	1.000	0.875	2.563	2.563	0.250	1.750	3.125	9.438	5.125	1.250	1.125	12.938	16.313	29.250	9.625	12.938	22.563	9.063	10.625	5.125
4	6	10	13.813	11.813	13.375	8.563	11.438	1.000	0.875	2.938	2.938	0.500	3.750	4.313	9.438	6.688	1.875	1.625	15.688	20.250	35.938	11.813	16.375	28.188	9.875	12.188	6.688
5	6	10	15.750	13.000	13.375	8.875	13.375	1.000	0.875	2.938	2.938	0.250	1.750	3.125	10.625	7.125	1.250	1.125	14.188	17.500	31.688	10.813	14.188	25.000	9.875	12.813	7.125
6	8	10	15.750	13.000	15.375	9.688	13.375	1.000	0.875	2.938	2.938	0.250	1.750	3.125	10.625	7.875	1.250	1.125	14.188	17.500	31.688	10.813	14.188	25.000	12.188	14.375	7.875
10	10	10	15.750	16.563	17.313	12.000	13.375	1.000	0.875	2.938	2.938	0.500	3.750	4.313	14.188	8.250	1.875	1.625	17.500	22.063	39.563	13.625	18.125	31.750	13.375	19.313	8.250
5	6	11	13.813	11.813	13.375	10.063	11.438	1.000	0.875	2.938	2.563	0.250	1.750	3.125	9.438	6.313	1.250	1.125	12.938	16.313	29.250	9.625	12.938	22.563	11.438	12.188	6.313
3	4	12	13.813	11.813	11.000	8.688	11.438	1.000	0.875	2.563	2.563	0.250	1.750	3.125	9.438	5.938	1.250	1.125	12.938	16.313	29.250	9.625	12.938	22.563	10.813	11.438	5.938
4	5	12	13.813	11.813	12.625	9.625	11.438	1.000	0.875	2.563	2.563	0.250	1.750	3.125	9.438	6.688	1.250	1.125	12.938	16.313	29.250	9.625	12.938	22.563	10.813	12.625	6.688
5	6	12	15.750	13.000	13.375	10.000	13.375	1.000	0.875	2.938	2.938	0.250	1.750	3.125	10.625	6.875	1.250	1.125	14.188	17.500	31.688	10.813	14.188	25.000	11.438	13.188	6.875
6	8	12	15.750	16.563	17.313	10.813	13.375	1.000	0.875	2.938	2.938	0.500	3.750	4.313	14.188	9.250	1.875	1.625	15.688	20.250	35.938	11.813	16.375	28.188	12.438	14.375	9.250
8	10	12	20.063	19.688	21.250	12.188	17.750	1.000	0.875	2.938	2.938	0.500	3.750	4.313	17.313	11.250	1.875	1.625	17.500	22.063	39.563	13.625	18.125	31.750	15.188	17.750	11.250
10	10	12	20.063	19.688	21.250	12.563	17.750	1.000	0.875	2.938	2.938	0.500	3.750	4.313	17.313	9.875	1.875	1.625	17.500	22.063	39.563	13.625	18.125	31.750	15.750	16.938	9.875
12	14	14	29.125	19.688	25.625	14.000	24.375	1.000	0.750	4.750	3.938	0.813	3.125	4.125	15.750	13.000	2.750	2.563	19.438	24.250	43.688	19.438	24.250	43.688	17.750	23.625	13.000
2	3	15	15.750	13.000	11.813	10.313	13.375	1.000	0.875	2.563	2.563	0.250	1.750	3.125	10.625	6.688	1.250	1.125	12.938	16.313	29.250	9.625	12.938	22.563	11.063	14.000	6.688
3	4	15	15.750	13.000	12.625	10.938	13.375	1.000	0.875	2.563	2.563	0.250	1.750	3.125	10.625	6.875	1.250	1.125	12.938	16.313	29.250	9.625	12.938	22.563	13.813	13.375	6.875
4	5	15	17.750	13.000	13.375	11.188	15.375	1.000	0.875	2.938	2.938	0.500	3.750	4.313	10.625	7.500	1.875	1.625	15.688	20.250	35.938	11.813	16.375	28.188	13.813	13.375	7.500
5	6	15	17.750	13.000	15.375	11.688	15.375	1.000	0.875	2.938	2.938	0.500	3.750	4.313	10.625	8.250	1.875	1.625	15.688	20.250	35.938	11.813	16.375	28.188	13.813	15.750	8.250
6	8	15	15.750	16.563	17.313	11.313	13.375	1.000	0.875	2.938	2.938	0.500	3.750	4.313	14.188	8.250	1.875	1.625	15.688	20.250	35.938	11.813	16.375	28.188	13.813	16.125	8.250
8	10	15	20.063	16.563	18.125	13.375	17.313	1.125	1.125	3.563	3.563	0.625	4.250	6.000	13.813	8.875	2.438	2.125	18.125	24.313	42.438	14.625	20.813	35.438	16.563	18.875	8.875
10	12	15	22.063	19.688	21.250	15.500	19.313	1.125	1.125	3.563	3.563	0.625	4.250	6.000	16.938	10.438	2.438	2.125	18.125	24.313	42.438	14.625	20.813	35.438	16.563	21.563	10.438
14	14	15	31.500	22.438	27.563	15.750	26.000	1.125	0.875	5.500	4.375	0.875	3.750	4.938	18.125	14.563	3.563	3.375	23.625	29.125	52.750	23.625	29.125	52.750	19.688	27.563	14.563
10	12	16	33.063	22.438	22.813	14.000	27.563	1.125	0.875	5.500	4.375	0.875	3.750	4.938	18.125	12.188	3.563	3.375	23.625	29.125	52.750	23.625	29.125	52.750	21.688	25.625	12.188
4	5	18	17.750	13.000	15.375	11.813	15.375	1.000	0.875	2.938	2.938	0.500	3.750	4.313	10.625	8.250	1.875	1.625	15.688	20.250	35.938	11.813	16.375	28.188	13.813	15.750	8.250
5	8	18	22.063	17.750	19.688	13.875	19.313	1.125	1.125	3.563	3.563	0.625	4.250	6.000	15.375	10.250	2.438	2.125	18.125	24.313	42.438	14.625	20.813	35.438	17.750	18.875	10.250
6	8	18	22.063	17.750	21.250	14.750	19.313	1.125	1.125	3.563	3.563	0.625	4.250	6.000	15.375	10.625	2.438	2.125	18.125	24.313	42.438	14.625	20.813	35.438	17.750	20.063	10.625
8	10	18	22.063	17.750	21.250	14.688	19.313	1.125	1.125	3.563	3.563	0.625	4.250	6.000	15.375	10.625	2.438	2.125	18.125	24.313	42.438	14.625	20.813	35.438	17.750	16.063	10.625
12	14	18	37.000	28.375	25.625	16.125	31.500	1.125	0.875	5.500	4.375	1.000	5.125	5.875	24.000	13.563	3.938	3.750	26.875	33.563	60.438	26.875	33.563	60.438	23.625	26.750	13.563
14	18	18	37.000	29.938	29.500	18.000	31.500	1.125	1.063	5.500	4.375	1.000	5.125	5.938	25.625	15.750	3.938	3.750	26.875	33.563	60.438	26.875	33.563	60.438	23.625	27.563	15.750
10	12	20	33.063	22.438	22.813	15.000	27.563	1.125	0.875	5.500	4.375	0.875	3.750	4.938	18.125	12.188	3.563	3.375	23.625	29.125	52.750	23.625	29.125	52.750	23.625	25.625	12.188
14	18	21	37.000	29.938	29.500	18.000	31.500	1.125	1.063	5.500	4.375	1.000	5.125	5.875	25.625	15.750	3.938	3.750	26.875	33.563	60.438	26.875	33.563	60.438	23.625	27.563	15.750
8	10	22	34.250	19.688	22.063	15.563	29.500	1.000	0.750	4.750	3.938	0.813	3.125	4.125	15.750	13.188	2.750	2.563	19.438	24.250	43.688	19.438	24.250	43.688	21.688	21.688	13.188
12	14	23	33.063	22.438	27.563	17.313	27.563	1.125	0.875	5.500	4.375	0.875	3.750	4.938	18.125	14.563	3.563	3.375	23.625	29.125	52.750	23.625	29.125	52.750	19.688	25.625	14.563
10	12	26	39.375	22.438	27.563	18.875	33.875	1.188	0.875	5.500	4.375	0.875	3.750	4.938	18.125	15.750	3.563	3.375	23.625	29.125	52.750	23.625	29.125	52.750	27.563	27.563	15.750

May 28, 2004

340 SERIES HD

AMERICAN-MARSH PUMPS

A WILO BRAND

DOUBLE SUCTION SPLITCASE PUMP ONLY

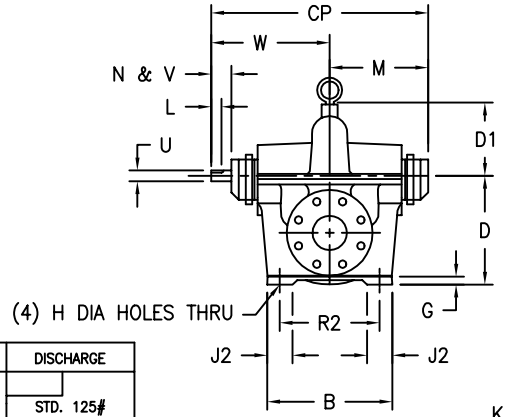

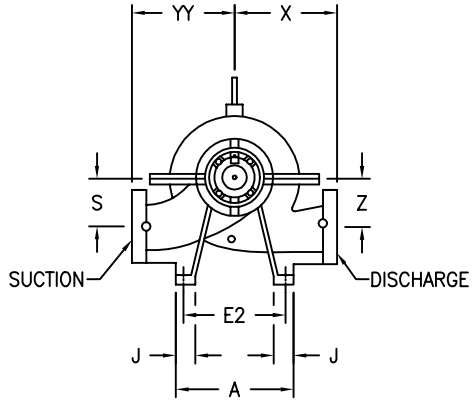

RIGHT HAND ROTATION
(STANDARD)

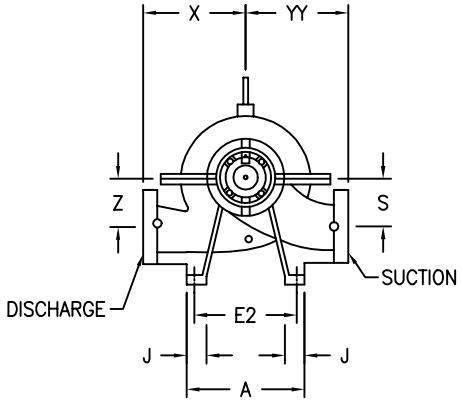

LEFT HAND ROTATION
(NON–STANDARD)

SUCTION	DISCHARGE
STD. 125# FLANGE	STD. 125# FLANGE
OPT. 250# FLANGE	OPT. 250# FLANGE

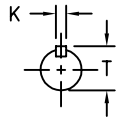

*ALL DIMENSIONS ARE IN INCHES AND ± 3/8.
*NOT FOR CONSTUCTION. UNLESS CERTIFIED BY ENGINEERING.

PUMP SIZE																			PACKED		PACKED	SEALED		SEALED			
DISCH	SUCT	CASE BORE	A	B	D	D1	E2	G	H	J	J2	K	L	N & V	R2	S	T	U	M	W	CP	M	W	CP	X	YY	Z
2 1/2	3	10	13.813	11.813	9.875	7.750	11.438	1.000	0.875	2.563	2.563	0.250	1.750	3.125	9.438	5.125	1.250	1.125	12.938	16.313	29.250	9.625	12.938	22.563	8.875	11.063	5.125
3	4	10	13.813	11.813	11.000	7.625	11.438	1.000	0.875	2.563	2.563	0.250	1.750	3.125	9.438	5.125	1.250	1.125	12.938	16.313	29.250	9.625	12.938	22.563	9.063	10.625	5.125
4	6	10	13.813	11.813	13.375	8.563	11.438	1.000	0.875	2.938	2.938	0.500	3.750	4.313	9.438	6.688	1.875	1.625	15.688	20.250	35.938	11.813	16.375	28.188	9.875	12.188	6.688
5	6	10	15.750	13.000	13.375	8.875	13.375	1.000	0.875	2.938	2.938	0.250	1.750	3.125	10.625	7.125	1.250	1.125	14.188	17.500	31.688	10.813	14.188	25.000	9.875	12.813	7.125
6	8	10	15.750	13.000	15.375	9.688	13.375	1.000	0.875	2.938	2.938	0.250	1.750	3.125	10.625	7.875	1.250	1.125	14.188	17.500	31.688	10.813	14.188	25.000	12.188	14.375	7.875
10	10	10	15.750	16.563	17.313	12.000	13.375	1.000	0.875	2.938	2.938	0.500	3.750	4.313	14.188	8.250	1.875	1.625	17.500	22.063	39.563	13.625	18.125	31.750	13.375	19.313	8.250
5	6	11	13.813	11.813	13.375	10.063	11.438	1.000	0.875	2.938	2.563	0.250	1.750	3.125	9.438	6.313	1.250	1.125	12.938	16.313	29.250	9.625	12.938	22.563	11.438	12.188	6.313
3	4	12	13.813	11.813	11.000	8.688	11.438	1.000	0.875	2.563	2.563	0.250	1.750	3.125	9.438	5.938	1.250	1.125	12.938	16.313	29.250	9.625	12.938	22.563	10.813	11.438	5.938
4	5	12	13.813	11.813	12.625	9.625	11.438	1.000	0.875	2.563	2.563	0.250	1.750	3.125	9.438	6.688	1.250	1.125	12.938	16.313	29.250	9.625	12.938	22.563	10.813	12.625	6.688
5	6	12	15.750	13.000	13.375	10.000	13.375	1.000	0.875	2.938	2.938	0.250	1.750	3.125	10.625	6.875	1.250	1.125	14.188	17.500	31.688	10.813	14.188	25.000	11.438	13.188	6.875
6	8	12	15.750	16.563	17.313	10.813	13.375	1.000	0.875	2.938	2.938	0.500	3.750	4.313	14.188	9.250	1.875	1.625	15.688	20.250	35.938	11.813	16.375	28.188	12.438	14.375	9.250
8	10	12	20.063	19.688	21.250	12.188	17.750	1.000	0.875	2.938	2.938	0.500	3.750	4.313	17.313	11.250	1.875	1.625	17.500	22.063	39.563	13.625	18.125	31.750	15.188	17.750	11.250
10	10	12	20.063	19.688	21.250	12.563	17.750	1.000	0.875	2.938	2.938	0.500	3.750	4.313	17.313	9.875	1.875	1.625	17.500	22.063	39.563	13.625	18.125	31.750	15.750	16.938	9.875
12	14	14	29.125	19.688	25.625	14.000	24.375	1.000	0.750	4.750	3.938	0.813	3.125	4.125	15.750	13.000	2.750	2.563	19.438	24.250	43.688	19.438	24.250	43.688	17.750	23.625	13.000
2	3	15	15.750	13.000	11.813	10.313	13.375	1.000	0.875	2.563	2.563	0.250	1.750	3.125	10.625	6.688	1.250	1.125	12.938	16.313	29.250	9.625	12.938	22.563	11.063	14.000	6.688
3	4	15	15.750	13.000	12.625	10.938	13.375	1.000	0.875	2.563	2.563	0.250	1.750	3.125	10.625	6.875	1.250	1.125	12.938	16.313	29.250	9.625	12.938	22.563	13.813	13.375	6.875
4	5	15	17.750	13.000	13.375	11.188	15.375	1.000	0.875	2.938	2.938	0.500	3.750	4.313	10.625	7.500	1.875	1.625	15.688	20.250	35.938	11.813	16.375	28.188	13.813	13.375	7.500
5	6	15	17.750	13.000	15.375	11.688	15.375	1.000	0.875	2.938	2.938	0.500	3.750	4.313	10.625	8.250	1.875	1.625	15.688	20.250	35.938	11.813	16.375	28.188	13.813	15.750	8.250
6	8	15	15.750	16.563	17.313	11.313	13.375	1.000	0.875	2.938	2.938	0.500	3.750	4.313	14.188	8.250	1.875	1.625	15.688	20.250	35.938	11.813	16.375	28.188	13.813	16.125	8.250
8	10	15	20.063	16.563	18.125	13.375	17.313	1.125	1.125	3.563	3.563	0.625	4.250	6.000	13.813	8.875	2.438	2.125	18.125	24.313	42.438	14.625	20.813	35.438	16.563	18.875	8.875
10	12	15	22.063	19.688	21.250	15.500	19.313	1.125	1.125	3.563	3.563	0.625	4.250	6.000	16.938	10.438	2.438	2.125	18.125	24.313	42.438	14.625	20.813	35.438	16.563	21.563	10.438
14	14	15	31.500	22.438	27.563	15.750	26.000	1.125	0.875	5.500	4.375	0.875	3.750	4.938	18.125	14.563	3.563	3.375	23.625	29.125	52.750	23.625	29.125	52.750	19.688	27.563	14.563
10	12	16	33.063	22.438	22.813	14.000	27.563	1.125	0.875	5.500	4.375	0.875	3.750	4.938	18.125	12.188	3.563	3.375	23.625	29.125	52.750	23.625	29.125	52.750	21.688	25.625	12.188
4	5	18	17.750	13.000	15.375	11.813	15.375	1.000	0.875	2.938	2.938	0.500	3.750	4.313	10.625	8.250	1.875	1.625	15.688	20.250	35.938	11.813	16.375	28.188	13.813	15.750	8.250
5	8	18	22.063	17.750	19.688	13.875	19.313	1.125	1.125	3.563	3.563	0.625	4.250	6.000	15.375	10.250	2.438	2.125	18.125	24.313	42.438	14.625	20.813	35.438	17.750	18.875	10.250
6	8	18	22.063	17.750	21.250	14.750	19.313	1.125	1.125	3.563	3.563	0.625	4.250	6.000	15.375	10.625	2.438	2.125	18.125	24.313	42.438	14.625	20.813	35.438	17.750	20.063	10.625
8	10	18	22.063	17.750	21.250	14.688	19.313	1.125	1.125	3.563	3.563	0.625	4.250	6.000	15.375	10.625	2.438	2.125	18.125	24.313	42.438	14.625	20.813	35.438	17.750	16.063	10.625
12	14	18	37.000	28.375	25.625	16.125	31.500	1.125	0.875	5.500	4.375	1.000	5.125	5.875	24.000	13.563	3.938	3.750	26.875	33.563	60.438	26.875	33.563	60.438	23.625	26.750	13.563
14	18	18	37.000	29.938	29.500	18.000	31.500	1.125	1.063	5.500	4.375	1.000	5.125	5.938	25.625	15.750	3.938	3.750	26.875	33.563	60.438	26.875	33.563	60.438	23.625	27.563	15.750
10	12	20	33.063	22.438	22.813	15.000	27.563	1.125	0.875	5.500	4.375	0.875	3.750	4.938	18.125	12.188	3.563	3.375	23.625	29.125	52.750	23.625	29.125	52.750	23.625	25.625	12.188
14	18	21	37.000	29.938	29.500	18.000	31.500	1.125	1.063	5.500	4.375	1.000	5.125	5.875	25.625	15.750	3.938	3.750	26.875	33.563	60.438	26.875	33.563	60.438	23.625	27.563	15.750
8	10	22	34.250	19.688	22.063	15.563	29.500	1.000	0.750	4.750	3.938	0.813	3.125	4.125	15.750	13.188	2.750	2.563	19.438	24.250	43.688	19.438	24.250	43.688	21.688	21.688	13.188
12	14	23	33.063	22.438	27.563	17.313	27.563	1.125	0.875	5.500	4.375	0.875	3.750	4.938	18.125	14.563	3.563	3.375	23.625	29.125	52.750	23.625	29.125	52.750	19.688	25.625	14.563
10	12	26	39.375	22.438	27.563	18.875	33.875	1.188	0.875	5.500	4.375	0.875	3.750	4.938	18.125	15.750	3.563	3.375	23.625	29.125	52.750	23.625	29.125	52.750	27.563	27.563	15.750

May 28, 2004

340 SERIES HD

AMERICAN-MARSH PUMPS

A WILO BRAND

DOUBLE SUCTION SPLITCASE PUMP ONLY

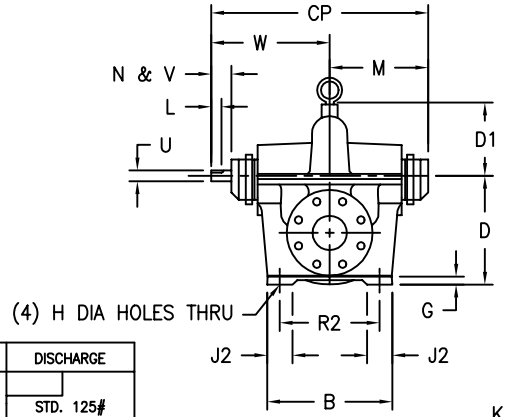

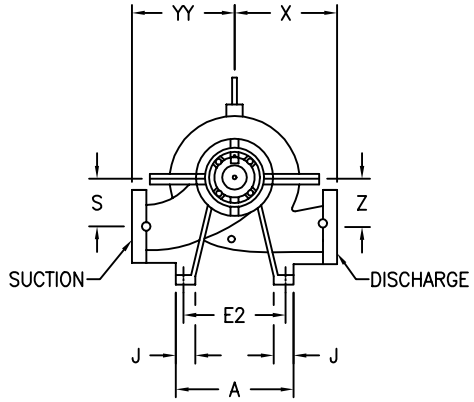

RIGHT HAND ROTATION
(STANDARD)

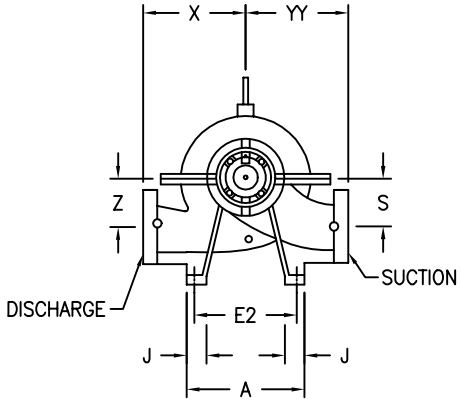

LEFT HAND ROTATION
(NON–STANDARD)

SUCTION	DISCHARGE
STD. 125# FLANGE	STD. 125# FLANGE
OPT. 250# FLANGE	OPT. 250# FLANGE

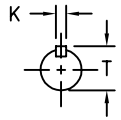

*ALL DIMENSIONS ARE IN INCHES AND ± 3/8.
*NOT FOR CONSTUCTION. UNLESS CERTIFIED BY ENGINEERING.

PUMP SIZE																			PACKED		PACKED	SEALED		SEALED			
DISCH	SUCT	CASE BORE	A	B	D	D1	E2	G	H	J	J2	K	L	N & V	R2	S	T	U	M	W	CP	M	W	CP	X	YY	Z
2 1/2	3	10	13.813	11.813	9.875	7.750	11.438	1.000	0.875	2.563	2.563	0.250	1.750	3.125	9.438	5.125	1.250	1.125	12.938	16.313	29.250	9.625	12.938	22.563	8.875	11.063	5.125
3	4	10	13.813	11.813	11.000	7.625	11.438	1.000	0.875	2.563	2.563	0.250	1.750	3.125	9.438	5.125	1.250	1.125	12.938	16.313	29.250	9.625	12.938	22.563	9.063	10.625	5.125
4	6	10	13.813	11.813	13.375	8.563	11.438	1.000	0.875	2.938	2.938	0.500	3.750	4.313	9.438	6.688	1.875	1.625	15.688	20.250	35.938	11.813	16.375	28.188	9.875	12.188	6.688
5	6	10	15.750	13.000	13.375	8.875	13.375	1.000	0.875	2.938	2.938	0.250	1.750	3.125	10.625	7.125	1.250	1.125	14.188	17.500	31.688	10.813	14.188	25.000	9.875	12.813	7.125
6	8	10	15.750	13.000	15.375	9.688	13.375	1.000	0.875	2.938	2.938	0.250	1.750	3.125	10.625	7.875	1.250	1.125	14.188	17.500	31.688	10.813	14.188	25.000	12.188	14.375	7.875
10	10	10	15.750	16.563	17.313	12.000	13.375	1.000	0.875	2.938	2.938	0.500	3.750	4.313	14.188	8.250	1.875	1.625	17.500	22.063	39.563	13.625	18.125	31.750	13.375	19.313	8.250
5	6	11	13.813	11.813	13.375	10.063	11.438	1.000	0.875	2.938	2.563	0.250	1.750	3.125	9.438	6.313	1.250	1.125	12.938	16.313	29.250	9.625	12.938	22.563	11.438	12.188	6.313
3	4	12	13.813	11.813	11.000	8.688	11.438	1.000	0.875	2.563	2.563	0.250	1.750	3.125	9.438	5.938	1.250	1.125	12.938	16.313	29.250	9.625	12.938	22.563	10.813	11.438	5.938
4	5	12	13.813	11.813	12.625	9.625	11.438	1.000	0.875	2.563	2.563	0.250	1.750	3.125	9.438	6.688	1.250	1.125	12.938	16.313	29.250	9.625	12.938	22.563	10.813	12.625	6.688
5	6	12	15.750	13.000	13.375	10.000	13.375	1.000	0.875	2.938	2.938	0.250	1.750	3.125	10.625	6.875	1.250	1.125	14.188	17.500	31.688	10.813	14.188	25.000	11.438	13.188	6.875
6	8	12	15.750	16.563	17.313	10.813	13.375	1.000	0.875	2.938	2.938	0.500	3.750	4.313	14.188	9.250	1.875	1.625	15.688	20.250	35.938	11.813	16.375	28.188	12.438	14.375	9.250
8	10	12	20.063	19.688	21.250	12.188	17.750	1.000	0.875	2.938	2.938	0.500	3.750	4.313	17.313	11.250	1.875	1.625	17.500	22.063	39.563	13.625	18.125	31.750	15.188	17.750	11.250
10	10	12	20.063	19.688	21.250	12.563	17.750	1.000	0.875	2.938	2.938	0.500	3.750	4.313	17.313	9.875	1.875	1.625	17.500	22.063	39.563	13.625	18.125	31.750	15.750	16.938	9.875
12	14	14	29.125	19.688	25.625	14.000	24.375	1.000	0.750	4.750	3.938	0.813	3.125	4.125	15.750	13.000	2.750	2.563	19.438	24.250	43.688	19.438	24.250	43.688	17.750	23.625	13.000
2	3	15	15.750	13.000	11.813	10.313	13.375	1.000	0.875	2.563	2.563	0.250	1.750	3.125	10.625	6.688	1.250	1.125	12.938	16.313	29.250	9.625	12.938	22.563	11.063	14.000	6.688
3	4	15	15.750	13.000	12.625	10.938	13.375	1.000	0.875	2.563	2.563	0.250	1.750	3.125	10.625	6.875	1.250	1.125	12.938	16.313	29.250	9.625	12.938	22.563	13.813	13.375	6.875
4	5	15	17.750	13.000	13.375	11.188	15.375	1.000	0.875	2.938	2.938	0.500	3.750	4.313	10.625	7.500	1.875	1.625	15.688	20.250	35.938	11.813	16.375	28.188	13.813	13.375	7.500
5	6	15	17.750	13.000	15.375	11.688	15.375	1.000	0.875	2.938	2.938	0.500	3.750	4.313	10.625	8.250	1.875	1.625	15.688	20.250	35.938	11.813	16.375	28.188	13.813	15.750	8.250
6	8	15	15.750	16.563	17.313	11.313	13.375	1.000	0.875	2.938	2.938	0.500	3.750	4.313	14.188	8.250	1.875	1.625	15.688	20.250	35.938	11.813	16.375	28.188	13.813	16.125	8.250
8	10	15	20.063	16.563	18.125	13.375	17.313	1.125	1.125	3.563	3.563	0.625	4.250	6.000	13.813	8.875	2.438	2.125	18.125	24.313	42.438	14.625	20.813	35.438	16.563	18.875	8.875
10	12	15	22.063	19.688	21.250	15.500	19.313	1.125	1.125	3.563	3.563	0.625	4.250	6.000	16.938	10.438	2.438	2.125	18.125	24.313	42.438	14.625	20.813	35.438	16.563	21.563	10.438
14	14	15	31.500	22.438	27.563	15.750	26.000	1.125	0.875	5.500	4.375	0.875	3.750	4.938	18.125	14.563	3.563	3.375	23.625	29.125	52.750	23.625	29.125	52.750	19.688	27.563	14.563
10	12	16	33.063	22.438	22.813	14.000	27.563	1.125	0.875	5.500	4.375	0.875	3.750	4.938	18.125	12.188	3.563	3.375	23.625	29.125	52.750	23.625	29.125	52.750	21.688	25.625	12.188
4	5	18	17.750	13.000	15.375	11.813	15.375	1.000	0.875	2.938	2.938	0.500	3.750	4.313	10.625	8.250	1.875	1.625	15.688	20.250	35.938	11.813	16.375	28.188	13.813	15.750	8.250
5	8	18	22.063	17.750	19.688	13.875	19.313	1.125	1.125	3.563	3.563	0.625	4.250	6.000	15.375	10.250	2.438	2.125	18.125	24.313	42.438	14.625	20.813	35.438	17.750	18.875	10.250
6	8	18	22.063	17.750	21.250	14.750	19.313	1.125	1.125	3.563	3.563	0.625	4.250	6.000	15.375	10.625	2.438	2.125	18.125	24.313	42.438	14.625	20.813	35.438	17.750	20.063	10.625
8	10	18	22.063	17.750	21.250	14.688	19.313	1.125	1.125	3.563	3.563	0.625	4.250	6.000	15.375	10.625	2.438	2.125	18.125	24.313	42.438	14.625	20.813	35.438	17.750	16.063	10.625
12	14	18	37.000	28.375	25.625	16.125	31.500	1.125	0.875	5.500	4.375	1.000	5.125	5.875	24.000	13.563	3.938	3.750	26.875	33.563	60.438	26.875	33.563	60.438	23.625	26.750	13.563
14	18	18	37.000	29.938	29.500	18.000	31.500	1.125	1.063	5.500	4.375	1.000	5.125	5.938	25.625	15.750	3.938	3.750	26.875	33.563	60.438	26.875	33.563	60.438	23.625	27.563	15.750
10	12	20	33.063	22.438	22.813	15.000	27.563	1.125	0.875	5.500	4.375	0.875	3.750	4.938	18.125	12.188	3.563	3.375	23.625	29.125	52.750	23.625	29.125	52.750	23.625	25.625	12.188
14	18	21	37.000	29.938	29.500	18.000	31.500	1.125	1.063	5.500	4.375	1.000	5.125	5.875	25.625	15.750	3.938	3.750	26.875	33.563	60.438	26.875	33.563	60.438	23.625	27.563	15.750
8	10	22	34.250	19.688	22.063	15.563	29.500	1.000	0.750	4.750	3.938	0.813	3.125	4.125	15.750	13.188	2.750	2.563	19.438	24.250	43.688	19.438	24.250	43.688	21.688	21.688	13.188
12	14	23	33.063	22.438	27.563	17.313	27.563	1.125	0.875	5.500	4.375	0.875	3.750	4.938	18.125	14.563	3.563	3.375	23.625	29.125	52.750	23.625	29.125	52.750	19.688	25.625	14.563
10	12	26	39.375	22.438	27.563	18.875	33.875	1.188	0.875	5.500	4.375	0.875	3.750	4.938	18.125	15.750	3.563	3.375	23.625	29.125	52.750	23.625	29.125	52.750	27.563	27.563	15.750

May 28, 2004

340 SERIES HD

AMERICAN-MARSH PUMPS

A WILO BRAND

DOUBLE SUCTION SPLITCASE PUMP ONLY

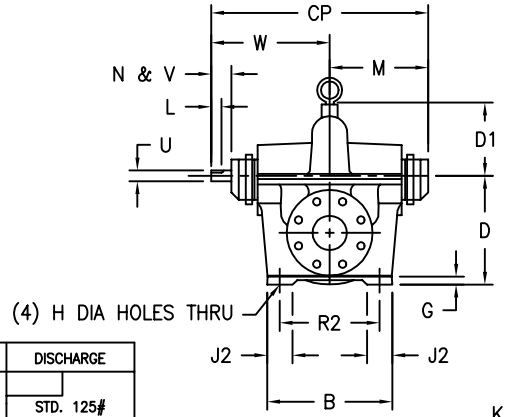

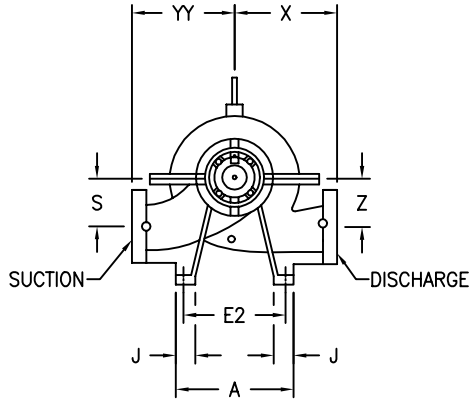

RIGHT HAND ROTATION
(STANDARD)

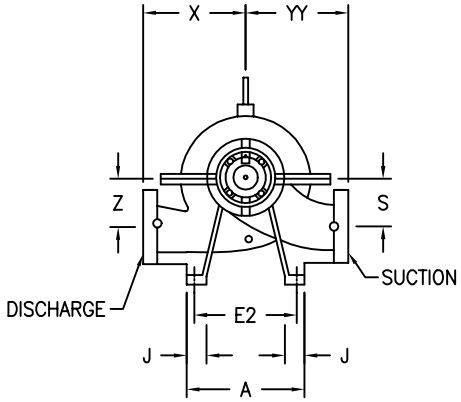

LEFT HAND ROTATION
(NON–STANDARD)

SUCTION	DISCHARGE
STD. 125# FLANGE	STD. 125# FLANGE
OPT. 250# FLANGE	OPT. 250# FLANGE

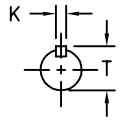

*ALL DIMENSIONS ARE IN INCHES AND ± 3/8.
*NOT FOR CONSTUCTION. UNLESS CERTIFIED BY ENGINEERING.

PUMP SIZE																			PACKED		PACKED	SEALED		SEALED			
DISCH	SUCT	CASE BORE	A	B	D	D1	E2	G	H	J	J2	K	L	N & V	R2	S	T	U	M	W	CP	M	W	CP	X	YY	Z
2 1/2	3	10	13.813	11.813	9.875	7.750	11.438	1.000	0.875	2.563	2.563	0.250	1.750	3.125	9.438	5.125	1.250	1.125	12.938	16.313	29.250	9.625	12.938	22.563	8.875	11.063	5.125
3	4	10	13.813	11.813	11.000	7.625	11.438	1.000	0.875	2.563	2.563	0.250	1.750	3.125	9.438	5.125	1.250	1.125	12.938	16.313	29.250	9.625	12.938	22.563	9.063	10.625	5.125
4	6	10	13.813	11.813	13.375	8.563	11.438	1.000	0.875	2.938	2.938	0.500	3.750	4.313	9.438	6.688	1.875	1.625	15.688	20.250	35.938	11.813	16.375	28.188	9.875	12.188	6.688
5	6	10	15.750	13.000	13.375	8.875	13.375	1.000	0.875	2.938	2.938	0.250	1.750	3.125	10.625	7.125	1.250	1.125	14.188	17.500	31.688	10.813	14.188	25.000	9.875	12.813	7.125
6	8	10	15.750	13.000	15.375	9.688	13.375	1.000	0.875	2.938	2.938	0.250	1.750	3.125	10.625	7.875	1.250	1.125	14.188	17.500	31.688	10.813	14.188	25.000	12.188	14.375	7.875
10	10	10	15.750	16.563	17.313	12.000	13.375	1.000	0.875	2.938	2.938	0.500	3.750	4.313	14.188	8.250	1.875	1.625	17.500	22.063	39.563	13.625	18.125	31.750	13.375	19.313	8.250
5	6	11	13.813	11.813	13.375	10.063	11.438	1.000	0.875	2.938	2.563	0.250	1.750	3.125	9.438	6.313	1.250	1.125	12.938	16.313	29.250	9.625	12.938	22.563	11.438	12.188	6.313
3	4	12	13.813	11.813	11.000	8.688	11.438	1.000	0.875	2.563	2.563	0.250	1.750	3.125	9.438	5.938	1.250	1.125	12.938	16.313	29.250	9.625	12.938	22.563	10.813	11.438	5.938
4	5	12	13.813	11.813	12.625	9.625	11.438	1.000	0.875	2.563	2.563	0.250	1.750	3.125	9.438	6.688	1.250	1.125	12.938	16.313	29.250	9.625	12.938	22.563	10.813	12.625	6.688
5	6	12	15.750	13.000	13.375	10.000	13.375	1.000	0.875	2.938	2.938	0.250	1.750	3.125	10.625	6.875	1.250	1.125	14.188	17.500	31.688	10.813	14.188	25.000	11.438	13.188	6.875
6	8	12	15.750	16.563	17.313	10.813	13.375	1.000	0.875	2.938	2.938	0.500	3.750	4.313	14.188	9.250	1.875	1.625	15.688	20.250	35.938	11.813	16.375	28.188	12.438	14.375	9.250
8	10	12	20.063	19.688	21.250	12.188	17.750	1.000	0.875	2.938	2.938	0.500	3.750	4.313	17.313	11.250	1.875	1.625	17.500	22.063	39.563	13.625	18.125	31.750	15.188	17.750	11.250
10	10	12	20.063	19.688	21.250	12.563	17.750	1.000	0.875	2.938	2.938	0.500	3.750	4.313	17.313	9.875	1.875	1.625	17.500	22.063	39.563	13.625	18.125	31.750	15.750	16.938	9.875
12	14	14	29.125	19.688	25.625	14.000	24.375	1.000	0.750	4.750	3.938	0.813	3.125	4.125	15.750	13.000	2.750	2.563	19.438	24.250	43.688	19.438	24.250	43.688	17.750	23.625	13.000
2	3	15	15.750	13.000	11.813	10.313	13.375	1.000	0.875	2.563	2.563	0.250	1.750	3.125	10.625	6.688	1.250	1.125	12.938	16.313	29.250	9.625	12.938	22.563	11.063	14.000	6.688
3	4	15	15.750	13.000	12.625	10.938	13.375	1.000	0.875	2.563	2.563	0.250	1.750	3.125	10.625	6.875	1.250	1.125	12.938	16.313	29.250	9.625	12.938	22.563	13.813	13.375	6.875
4	5	15	17.750	13.000	13.375	11.188	15.375	1.000	0.875	2.938	2.938	0.500	3.750	4.313	10.625	7.500	1.875	1.625	15.688	20.250	35.938	11.813	16.375	28.188	13.813	13.375	7.500
5	6	15	17.750	13.000	15.375	11.688	15.375	1.000	0.875	2.938	2.938	0.500	3.750	4.313	10.625	8.250	1.875	1.625	15.688	20.250	35.938	11.813	16.375	28.188	13.813	15.750	8.250
6	8	15	15.750	16.563	17.313	11.313	13.375	1.000	0.875	2.938	2.938	0.500	3.750	4.313	14.188	8.250	1.875	1.625	15.688	20.250	35.938	11.813	16.375	28.188	13.813	16.125	8.250
8	10	15	20.063	16.563	18.125	13.375	17.313	1.125	1.125	3.563	3.563	0.625	4.250	6.000	13.813	8.875	2.438	2.125	18.125	24.313	42.438	14.625	20.813	35.438	16.563	18.875	8.875
10	12	15	22.063	19.688	21.250	15.500	19.313	1.125	1.125	3.563	3.563	0.625	4.250	6.000	16.938	10.438	2.438	2.125	18.125	24.313	42.438	14.625	20.813	35.438	16.563	21.563	10.438
14	14	15	31.500	22.438	27.563	15.750	26.000	1.125	0.875	5.500	4.375	0.875	3.750	4.938	18.125	14.563	3.563	3.375	23.625	29.125	52.750	23.625	29.125	52.750	19.688	27.563	14.563
10	12	16	33.063	22.438	22.813	14.000	27.563	1.125	0.875	5.500	4.375	0.875	3.750	4.938	18.125	12.188	3.563	3.375	23.625	29.125	52.750	23.625	29.125	52.750	21.688	25.625	12.188
4	5	18	17.750	13.000	15.375	11.813	15.375	1.000	0.875	2.938	2.938	0.500	3.750	4.313	10.625	8.250	1.875	1.625	15.688	20.250	35.938	11.813	16.375	28.188	13.813	15.750	8.250
5	8	18	22.063	17.750	19.688	13.875	19.313	1.125	1.125	3.563	3.563	0.625	4.250	6.000	15.375	10.250	2.438	2.125	18.125	24.313	42.438	14.625	20.813	35.438	17.750	18.875	10.250
6	8	18	22.063	17.750	21.250	14.750	19.313	1.125	1.125	3.563	3.563	0.625	4.250	6.000	15.375	10.625	2.438	2.125	18.125	24.313	42.438	14.625	20.813	35.438	17.750	20.063	10.625
8	10	18	22.063	17.750	21.250	14.688	19.313	1.125	1.125	3.563	3.563	0.625	4.250	6.000	15.375	10.625	2.438	2.125	18.125	24.313	42.438	14.625	20.813	35.438	17.750	16.063	10.625
12	14	18	37.000	28.375	25.625	16.125	31.500	1.125	0.875	5.500	4.375	1.000	5.125	5.875	24.000	13.563	3.938	3.750	26.875	33.563	60.438	26.875	33.563	60.438	23.625	26.750	13.563
14	18	18	37.000	29.938	29.500	18.000	31.500	1.125	1.063	5.500	4.375	1.000	5.125	5.938	25.625	15.750	3.938	3.750	26.875	33.563	60.438	26.875	33.563	60.438	23.625	27.563	15.750
10	12	20	33.063	22.438	22.813	15.000	27.563	1.125	0.875	5.500	4.375	0.875	3.750	4.938	18.125	12.188	3.563	3.375	23.625	29.125	52.750	23.625	29.125	52.750	23.625	25.625	12.188
14	18	21	37.000	29.938	29.500	18.000	31.500	1.125	1.063	5.500	4.375	1.000	5.125	5.875	25.625	15.750	3.938	3.750	26.875	33.563	60.438	26.875	33.563	60.438	23.625	27.563	15.750
8	10	22	34.250	19.688	22.063	15.563	29.500	1.000	0.750	4.750	3.938	0.813	3.125	4.125	15.750	13.188	2.750	2.563	19.438	24.250	43.688	19.438	24.250	43.688	21.688	21.688	13.188
12	14	23	33.063	22.438	27.563	17.313	27.563	1.125	0.875	5.500	4.375	0.875	3.750	4.938	18.125	14.563	3.563	3.375	23.625	29.125	52.750	23.625	29.125	52.750	19.688	25.625	14.563
10	12	26	39.375	22.438	27.563	18.875	33.875	1.188	0.875	5.500	4.375	0.875	3.750	4.938	18.125	15.750	3.563	3.375	23.625	29.125	52.750	23.625	29.125	52.750	27.563	27.563	15.750

May 28, 2004

340 SERIES HD

AMERICAN-MARSH PUMPS

A WILO BRAND

DOUBLE SUCTION SPLITCASE PUMP ONLY

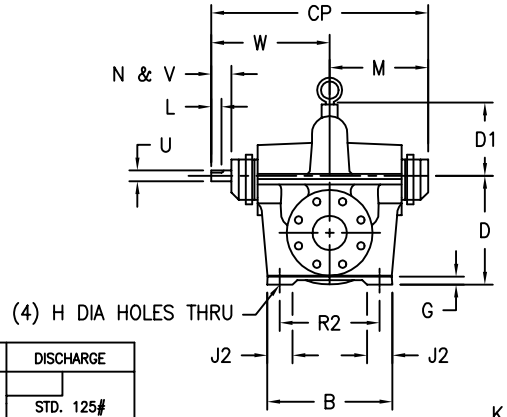

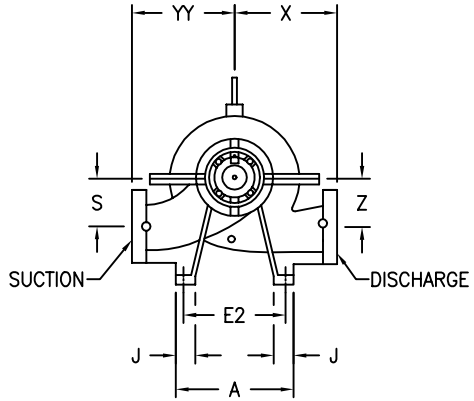

RIGHT HAND ROTATION
(STANDARD)

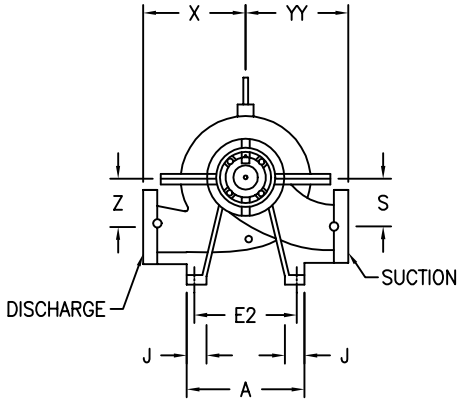

LEFT HAND ROTATION
(NON–STANDARD)

SUCTION	DISCHARGE
STD. 125# FLANGE	STD. 125# FLANGE
OPT. 250# FLANGE	OPT. 250# FLANGE

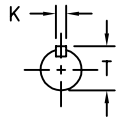

*ALL DIMENSIONS ARE IN INCHES AND ± 3/8.
*NOT FOR CONSTUCTION. UNLESS CERTIFIED BY ENGINEERING.

PUMP SIZE																			PACKED		PACKED	SEALED		SEALED			
DISCH	SUCT	CASE BORE	A	B	D	D1	E2	G	H	J	J2	K	L	N & V	R2	S	T	U	M	W	CP	M	W	CP	X	YY	Z
2 1/2	3	10	13.813	11.813	9.875	7.750	11.438	1.000	0.875	2.563	2.563	0.250	1.750	3.125	9.438	5.125	1.250	1.125	12.938	16.313	29.250	9.625	12.938	22.563	8.875	11.063	5.125
3	4	10	13.813	11.813	11.000	7.625	11.438	1.000	0.875	2.563	2.563	0.250	1.750	3.125	9.438	5.125	1.250	1.125	12.938	16.313	29.250	9.625	12.938	22.563	9.063	10.625	5.125
4	6	10	13.813	11.813	13.375	8.563	11.438	1.000	0.875	2.938	2.938	0.500	3.750	4.313	9.438	6.688	1.875	1.625	15.688	20.250	35.938	11.813	16.375	28.188	9.875	12.188	6.688
5	6	10	15.750	13.000	13.375	8.875	13.375	1.000	0.875	2.938	2.938	0.250	1.750	3.125	10.625	7.125	1.250	1.125	14.188	17.500	31.688	10.813	14.188	25.000	9.875	12.813	7.125
6	8	10	15.750	13.000	15.375	9.688	13.375	1.000	0.875	2.938	2.938	0.250	1.750	3.125	10.625	7.875	1.250	1.125	14.188	17.500	31.688	10.813	14.188	25.000	12.188	14.375	7.875
10	10	10	15.750	16.563	17.313	12.000	13.375	1.000	0.875	2.938	2.938	0.500	3.750	4.313	14.188	8.250	1.875	1.625	17.500	22.063	39.563	13.625	18.125	31.750	13.375	19.313	8.250
5	6	11	13.813	11.813	13.375	10.063	11.438	1.000	0.875	2.938	2.563	0.250	1.750	3.125	9.438	6.313	1.250	1.125	12.938	16.313	29.250	9.625	12.938	22.563	11.438	12.188	6.313
3	4	12	13.813	11.813	11.000	8.688	11.438	1.000	0.875	2.563	2.563	0.250	1.750	3.125	9.438	5.938	1.250	1.125	12.938	16.313	29.250	9.625	12.938	22.563	10.813	11.438	5.938
4	5	12	13.813	11.813	12.625	9.625	11.438	1.000	0.875	2.563	2.563	0.250	1.750	3.125	9.438	6.688	1.250	1.125	12.938	16.313	29.250	9.625	12.938	22.563	10.813	12.625	6.688
5	6	12	15.750	13.000	13.375	10.000	13.375	1.000	0.875	2.938	2.938	0.250	1.750	3.125	10.625	6.875	1.250	1.125	14.188	17.500	31.688	10.813	14.188	25.000	11.438	13.188	6.875
6	8	12	15.750	16.563	17.313	10.813	13.375	1.000	0.875	2.938	2.938	0.500	3.750	4.313	14.188	9.250	1.875	1.625	15.688	20.250	35.938	11.813	16.375	28.188	12.438	14.375	9.250
8	10	12	20.063	19.688	21.250	12.188	17.750	1.000	0.875	2.938	2.938	0.500	3.750	4.313	17.313	11.250	1.875	1.625	17.500	22.063	39.563	13.625	18.125	31.750	15.188	17.750	11.250
10	10	12	20.063	19.688	21.250	12.563	17.750	1.000	0.875	2.938	2.938	0.500	3.750	4.313	17.313	9.875	1.875	1.625	17.500	22.063	39.563	13.625	18.125	31.750	15.750	16.938	9.875
12	14	14	29.125	19.688	25.625	14.000	24.375	1.000	0.750	4.750	3.938	0.813	3.125	4.125	15.750	13.000	2.750	2.563	19.438	24.250	43.688	19.438	24.250	43.688	17.750	23.625	13.000
2	3	15	15.750	13.000	11.813	10.313	13.375	1.000	0.875	2.563	2.563	0.250	1.750	3.125	10.625	6.688	1.250	1.125	12.938	16.313	29.250	9.625	12.938	22.563	11.063	14.000	6.688
3	4	15	15.750	13.000	12.625	10.938	13.375	1.000	0.875	2.563	2.563	0.250	1.750	3.125	10.625	6.875	1.250	1.125	12.938	16.313	29.250	9.625	12.938	22.563	13.813	13.375	6.875
4	5	15	17.750	13.000	13.375	11.188	15.375	1.000	0.875	2.938	2.938	0.500	3.750	4.313	10.625	7.500	1.875	1.625	15.688	20.250	35.938	11.813	16.375	28.188	13.813	13.375	7.500
5	6	15	17.750	13.000	15.375	11.688	15.375	1.000	0.875	2.938	2.938	0.500	3.750	4.313	10.625	8.250	1.875	1.625	15.688	20.250	35.938	11.813	16.375	28.188	13.813	15.750	8.250
6	8	15	15.750	16.563	17.313	11.313	13.375	1.000	0.875	2.938	2.938	0.500	3.750	4.313	14.188	8.250	1.875	1.625	15.688	20.250	35.938	11.813	16.375	28.188	13.813	16.125	8.250
8	10	15	20.063	16.563	18.125	13.375	17.313	1.125	1.125	3.563	3.563	0.625	4.250	6.000	13.813	8.875	2.438	2.125	18.125	24.313	42.438	14.625	20.813	35.438	16.563	18.875	8.875
10	12	15	22.063	19.688	21.250	15.500	19.313	1.125	1.125	3.563	3.563	0.625	4.250	6.000	16.938	10.438	2.438	2.125	18.125	24.313	42.438	14.625	20.813	35.438	16.563	21.563	10.438
14	14	15	31.500	22.438	27.563	15.750	26.000	1.125	0.875	5.500	4.375	0.875	3.750	4.938	18.125	14.563	3.563	3.375	23.625	29.125	52.750	23.625	29.125	52.750	19.688	27.563	14.563
10	12	16	33.063	22.438	22.813	14.000	27.563	1.125	0.875	5.500	4.375	0.875	3.750	4.938	18.125	12.188	3.563	3.375	23.625	29.125	52.750	23.625	29.125	52.750	21.688	25.625	12.188
4	5	18	17.750	13.000	15.375	11.813	15.375	1.000	0.875	2.938	2.938	0.500	3.750	4.313	10.625	8.250	1.875	1.625	15.688	20.250	35.938	11.813	16.375	28.188	13.813	15.750	8.250
5	8	18	22.063	17.750	19.688	13.875	19.313	1.125	1.125	3.563	3.563	0.625	4.250	6.000	15.375	10.250	2.438	2.125	18.125	24.313	42.438	14.625	20.813	35.438	17.750	18.875	10.250
6	8	18	22.063	17.750	21.250	14.750	19.313	1.125	1.125	3.563	3.563	0.625	4.250	6.000	15.375	10.625	2.438	2.125	18.125	24.313	42.438	14.625	20.813	35.438	17.750	20.063	10.625
8	10	18	22.063	17.750	21.250	14.688	19.313	1.125	1.125	3.563	3.563	0.625	4.250	6.000	15.375	10.625	2.438	2.125	18.125	24.313	42.438	14.625	20.813	35.438	17.750	16.063	10.625
12	14	18	37.000	28.375	25.625	16.125	31.500	1.125	0.875	5.500	4.375	1.000	5.125	5.875	24.000	13.563	3.938	3.750	26.875	33.563	60.438	26.875	33.563	60.438	23.625	26.750	13.563
14	18	18	37.000	29.938	29.500	18.000	31.500	1.125	1.063	5.500	4.375	1.000	5.125	5.938	25.625	15.750	3.938	3.750	26.875	33.563	60.438	26.875	33.563	60.438	23.625	27.563	15.750
10	12	20	33.063	22.438	22.813	15.000	27.563	1.125	0.875	5.500	4.375	0.875	3.750	4.938	18.125	12.188	3.563	3.375	23.625	29.125	52.750	23.625	29.125	52.750	23.625	25.625	12.188
14	18	21	37.000	29.938	29.500	18.000	31.500	1.125	1.063	5.500	4.375	1.000	5.125	5.875	25.625	15.750	3.938	3.750	26.875	33.563	60.438	26.875	33.563	60.438	23.625	27.563	15.750
8	10	22	34.250	19.688	22.063	15.563	29.500	1.000	0.750	4.750	3.938	0.813	3.125	4.125	15.750	13.188	2.750	2.563	19.438	24.250	43.688	19.438	24.250	43.688	21.688	21.688	13.188
12	14	23	33.063	22.438	27.563	17.313	27.563	1.125	0.875	5.500	4.375	0.875	3.750	4.938	18.125	14.563	3.563	3.375	23.625	29.125	52.750	23.625	29.125	52.750	19.688	25.625	14.563
10	12	26	39.375	22.438	27.563	18.875	33.875	1.188	0.875	5.500	4.375	0.875	3.750	4.938	18.125	15.750	3.563	3.375	23.625	29.125	52.750	23.625	29.125	52.750	27.563	27.563	15.750

May 28, 2004

340 SERIES HD

AMERICAN-MARSH PUMPS

A WILO BRAND

DOUBLE SUCTION SPLITCASE PUMP ONLY

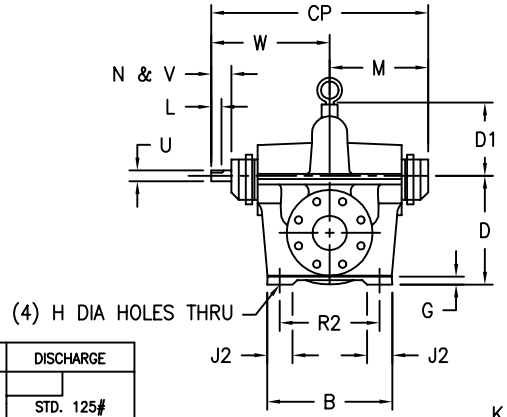

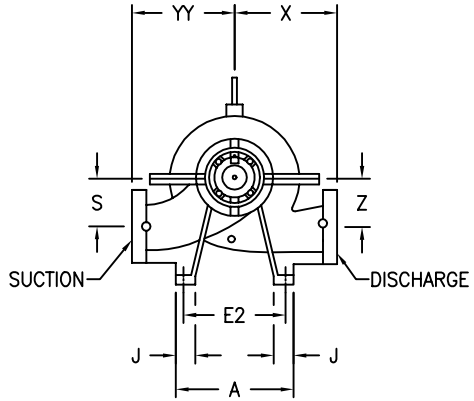

RIGHT HAND ROTATION
(STANDARD)

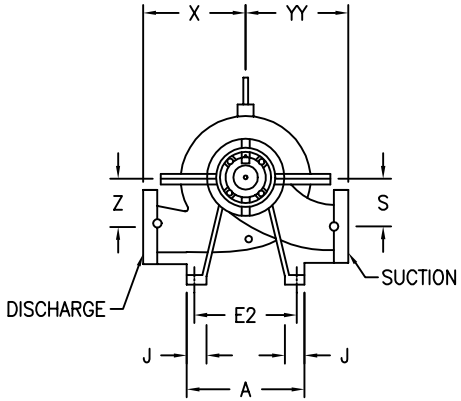

LEFT HAND ROTATION
(NON–STANDARD)

SUCTION	DISCHARGE
STD. 125# FLANGE	STD. 125# FLANGE
OPT. 250# FLANGE	OPT. 250# FLANGE

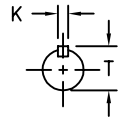

*ALL DIMENSIONS ARE IN INCHES AND ± 3/8.
*NOT FOR CONSTUCTION. UNLESS CERTIFIED BY ENGINEERING.

PUMP SIZE																			PACKED		PACKED	SEALED		SEALED			
DISCH	SUCT	CASE BORE	A	B	D	D1	E2	G	H	J	J2	K	L	N & V	R2	S	T	U	M	W	CP	M	W	CP	X	YY	Z
2 1/2	3	10	13.813	11.813	9.875	7.750	11.438	1.000	0.875	2.563	2.563	0.250	1.750	3.125	9.438	5.125	1.250	1.125	12.938	16.313	29.250	9.625	12.938	22.563	8.875	11.063	5.125
3	4	10	13.813	11.813	11.000	7.625	11.438	1.000	0.875	2.563	2.563	0.250	1.750	3.125	9.438	5.125	1.250	1.125	12.938	16.313	29.250	9.625	12.938	22.563	9.063	10.625	5.125
4	6	10	13.813	11.813	13.375	8.563	11.438	1.000	0.875	2.938	2.938	0.500	3.750	4.313	9.438	6.688	1.875	1.625	15.688	20.250	35.938	11.813	16.375	28.188	9.875	12.188	6.688
5	6	10	15.750	13.000	13.375	8.875	13.375	1.000	0.875	2.938	2.938	0.250	1.750	3.125	10.625	7.125	1.250	1.125	14.188	17.500	31.688	10.813	14.188	25.000	9.875	12.813	7.125
6	8	10	15.750	13.000	15.375	9.688	13.375	1.000	0.875	2.938	2.938	0.250	1.750	3.125	10.625	7.875	1.250	1.125	14.188	17.500	31.688	10.813	14.188	25.000	12.188	14.375	7.875
10	10	10	15.750	16.563	17.313	12.000	13.375	1.000	0.875	2.938	2.938	0.500	3.750	4.313	14.188	8.250	1.875	1.625	17.500	22.063	39.563	13.625	18.125	31.750	13.375	19.313	8.250
5	6	11	13.813	11.813	13.375	10.063	11.438	1.000	0.875	2.938	2.563	0.250	1.750	3.125	9.438	6.313	1.250	1.125	12.938	16.313	29.250	9.625	12.938	22.563	11.438	12.188	6.313
3	4	12	13.813	11.813	11.000	8.688	11.438	1.000	0.875	2.563	2.563	0.250	1.750	3.125	9.438	5.938	1.250	1.125	12.938	16.313	29.250	9.625	12.938	22.563	10.813	11.438	5.938
4	5	12	13.813	11.813	12.625	9.625	11.438	1.000	0.875	2.563	2.563	0.250	1.750	3.125	9.438	6.688	1.250	1.125	12.938	16.313	29.250	9.625	12.938	22.563	10.813	12.625	6.688
5	6	12	15.750	13.000	13.375	10.000	13.375	1.000	0.875	2.938	2.938	0.250	1.750	3.125	10.625	6.875	1.250	1.125	14.188	17.500	31.688	10.813	14.188	25.000	11.438	13.188	6.875
6	8	12	15.750	16.563	17.313	10.813	13.375	1.000	0.875	2.938	2.938	0.500	3.750	4.313	14.188	9.250	1.875	1.625	15.688	20.250	35.938	11.813	16.375	28.188	12.438	14.375	9.250
8	10	12	20.063	19.688	21.250	12.188	17.750	1.000	0.875	2.938	2.938	0.500	3.750	4.313	17.313	11.250	1.875	1.625	17.500	22.063	39.563	13.625	18.125	31.750	15.188	17.750	11.250
10	10	12	20.063	19.688	21.250	12.563	17.750	1.000	0.875	2.938	2.938	0.500	3.750	4.313	17.313	9.875	1.875	1.625	17.500	22.063	39.563	13.625	18.125	31.750	15.750	16.938	9.875
12	14	14	29.125	19.688	25.625	14.000	24.375	1.000	0.750	4.750	3.938	0.813	3.125	4.125	15.750	13.000	2.750	2.563	19.438	24.250	43.688	19.438	24.250	43.688	17.750	23.625	13.000
2	3	15	15.750	13.000	11.813	10.313	13.375	1.000	0.875	2.563	2.563	0.250	1.750	3.125	10.625	6.688	1.250	1.125	12.938	16.313	29.250	9.625	12.938	22.563	11.063	14.000	6.688
3	4	15	15.750	13.000	12.625	10.938	13.375	1.000	0.875	2.563	2.563	0.250	1.750	3.125	10.625	6.875	1.250	1.125	12.938	16.313	29.250	9.625	12.938	22.563	13.813	13.375	6.875
4	5	15	17.750	13.000	13.375	11.188	15.375	1.000	0.875	2.938	2.938	0.500	3.750	4.313	10.625	7.500	1.875	1.625	15.688	20.250	35.938	11.813	16.375	28.188	13.813	13.375	7.500
5	6	15	17.750	13.000	15.375	11.688	15.375	1.000	0.875	2.938	2.938	0.500	3.750	4.313	10.625	8.250	1.875	1.625	15.688	20.250	35.938	11.813	16.375	28.188	13.813	15.750	8.250
6	8	15	15.750	16.563	17.313	11.313	13.375	1.000	0.875	2.938	2.938	0.500	3.750	4.313	14.188	8.250	1.875	1.625	15.688	20.250	35.938	11.813	16.375	28.188	13.813	16.125	8.250
8	10	15	20.063	16.563	18.125	13.375	17.313	1.125	1.125	3.563	3.563	0.625	4.250	6.000	13.813	8.875	2.438	2.125	18.125	24.313	42.438	14.625	20.813	35.438	16.563	18.875	8.875
10	12	15	22.063	19.688	21.250	15.500	19.313	1.125	1.125	3.563	3.563	0.625	4.250	6.000	16.938	10.438	2.438	2.125	18.125	24.313	42.438	14.625	20.813	35.438	16.563	21.563	10.438
14	14	15	31.500	22.438	27.563	15.750	26.000	1.125	0.875	5.500	4.375	0.875	3.750	4.938	18.125	14.563	3.563	3.375	23.625	29.125	52.750	23.625	29.125	52.750	19.688	27.563	14.563
10	12	16	33.063	22.438	22.813	14.000	27.563	1.125	0.875	5.500	4.375	0.875	3.750	4.938	18.125	12.188	3.563	3.375	23.625	29.125	52.750	23.625	29.125	52.750	21.688	25.625	12.188
4	5	18	17.750	13.000	15.375	11.813	15.375	1.000	0.875	2.938	2.938	0.500	3.750	4.313	10.625	8.250	1.875	1.625	15.688	20.250	35.938	11.813	16.375	28.188	13.813	15.750	8.250
5	8	18	22.063	17.750	19.688	13.875	19.313	1.125	1.125	3.563	3.563	0.625	4.250	6.000	15.375	10.250	2.438	2.125	18.125	24.313	42.438	14.625	20.813	35.438	17.750	18.875	10.250
6	8	18	22.063	17.750	21.250	14.750	19.313	1.125	1.125	3.563	3.563	0.625	4.250	6.000	15.375	10.625	2.438	2.125	18.125	24.313	42.438	14.625	20.813	35.438	17.750	20.063	10.625
8	10	18	22.063	17.750	21.250	14.688	19.313	1.125	1.125	3.563	3.563	0.625	4.250	6.000	15.375	10.625	2.438	2.125	18.125	24.313	42.438	14.625	20.813	35.438	17.750	16.063	10.625
12	14	18	37.000	28.375	25.625	16.125	31.500	1.125	0.875	5.500	4.375	1.000	5.125	5.875	24.000	13.563	3.938	3.750	26.875	33.563	60.438	26.875	33.563	60.438	23.625	26.750	13.563
14	18	18	37.000	29.938	29.500	18.000	31.500	1.125	1.063	5.500	4.375	1.000	5.125	5.938	25.625	15.750	3.938	3.750	26.875	33.563	60.438	26.875	33.563	60.438	23.625	27.563	15.750
10	12	20	33.063	22.438	22.813	15.000	27.563	1.125	0.875	5.500	4.375	0.875	3.750	4.938	18.125	12.188	3.563	3.375	23.625	29.125	52.750	23.625	29.125	52.750	23.625	25.625	12.188
14	18	21	37.000	29.938	29.500	18.000	31.500	1.125	1.063	5.500	4.375	1.000	5.125	5.875	25.625	15.750	3.938	3.750	26.875	33.563	60.438	26.875	33.563	60.438	23.625	27.563	15.750
8	10	22	34.250	19.688	22.063	15.563	29.500	1.000	0.750	4.750	3.938	0.813	3.125	4.125	15.750	13.188	2.750	2.563	19.438	24.250	43.688	19.438	24.250	43.688	21.688	21.688	13.188
12	14	23	33.063	22.438	27.563	17.313	27.563	1.125	0.875	5.500	4.375	0.875	3.750	4.938	18.125	14.563	3.563	3.375	23.625	29.125	52.750	23.625	29.125	52.750	19.688	25.625	14.563
10	12	26	39.375	22.438	27.563	18.875	33.875	1.188	0.875	5.500	4.375	0.875	3.750	4.938	18.125	15.750	3.563	3.375	23.625	29.125	52.750	23.625	29.125	52.750	27.563	27.563	15.750