Submittal Data Sheet

Wilo NL-HE – Base Mounted End Suction Pumps

NL-HE 6 x 5 x 8 (4 Pole)

Project:	
Engineer:	
Contractor:	
Submitted By:	Date:
Approved By:	Date:

Tag #	Model #	Flow (USGPM)	Head (Feet)	HP	Enclosure	Frame	Cycle	Phase	Voltage	RPM
	NL-HE 6 x 5 x 8						**60Hz**	**3**		

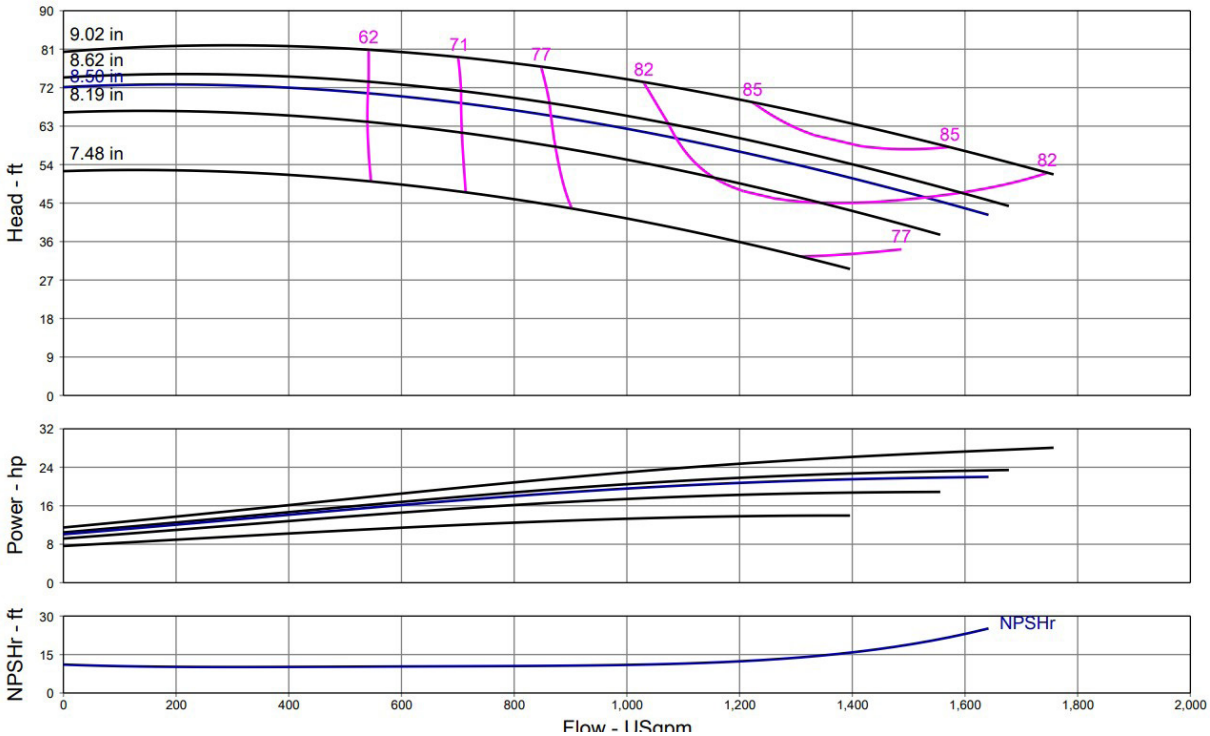

Technical Data	
PEI	
0.95	
Approved Fluids	
Heating Water	
Cooling and cold water	
Pressure /Temperature Ratings	
Ambient Temperature:	+5 °F to +104 °F (-15 °C to +40 °C)
Max Working Pressure & Temperature:	189 psi (up to 284 °F Fluid Temperature) 232 psi (up to 248 °F Fluid Temperature)
Water-Glycol Mixtures for 20-40% glycol and fluid temp ≤ 104°F (40°C)	

Materials of Construction		
☐	Pump Housing	EN-GL-250 Gray Cast Iron
☐	Impeller	EN 1.4408 Cast Stainless Steel
☐	Impeller (optional)	CC480K Bronze or EN-GJL 1030 Cast Iron
☐	Pump Shaft	1.4021 + QT700 Stainless Steel
☐	Mechanical Seal	Carbon/silicon carbide/ EPDM (E1)
☐	Other Mechanical Seals	Avail. on request
☐	Additional Spacer Coupling	Avail. on request
☐	Other:	

Approval Stamp

Submittal Data Sheet

Wilo NL-HE - Base Mounted End Suction Pumps

Dimensions & Weights

Wilo NL-HE

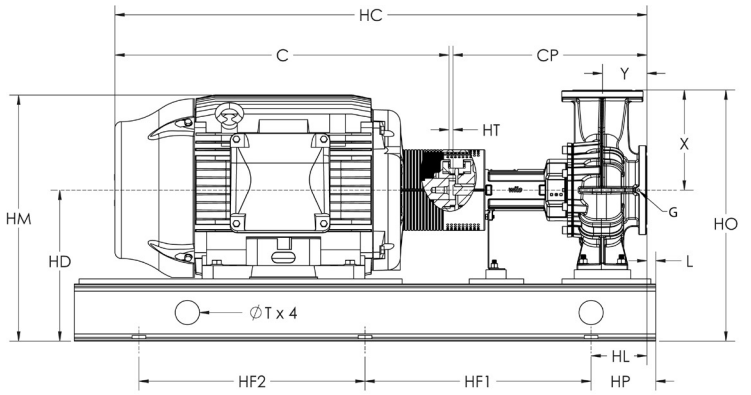

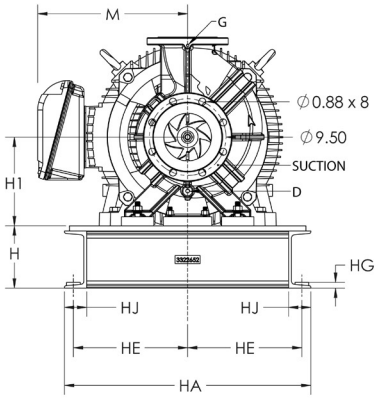

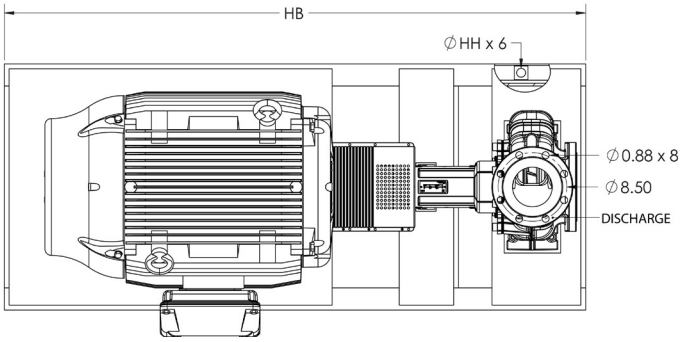

FLANGES/CONNECTIONS	
SUCTION	6" ASME B16.1-CLASS 125
DISCHARGE	5" ASME B16.1-CLASS 125
G	DIN 3858-Rp1/8" BSPP
D	DIN 3858-Rp3/8" BSPP

NL-HE 6 x 5 x 8

Motor							Dimensions - Inches																								
HP	ENCL	Frame	Volt	RPM	EFF	PF	H	H1	X	HD	HO	HM	M	HA	HE	HG	HJ	Y	HT	HC	C	CP	L	HL	T	HH	HP	HF1	HF2	HB	Wt. (lb)
15	ODP	254/6T	208-230/460	1775	93	0.8	5.9	9.8	12.4	15.7	28.1	21.5	9.5	21.7	9.9	0.64	2.4	5.5	0.50	45.0	20.5	24.0	0.43	4.32	2.25	0.95	4.8	19	19	48	651
15	TEFC	254/6T	208-230/460	1765	92.4	0.83	5.9	9.8	12.4	15.7	28.1	24.4	10.5	23.7	10.9	0.64	2.4	5.5	0.50	49.6	25.0	24.0	0.43	5.57	2.25	0.95	6.0	20	20	52	832
15	ODP	254/6T	575	1775	93	0.8	5.9	9.8	12.4	15.7	28.1	21.5	9.5	21.7	9.9	0.64	2.4	5.5	0.50	45.0	20.5	24.0	0.43	4.32	2.25	0.95	4.8	19	19	48	651
15	TEFC	254/6T	575	1765	92.4	0.83	5.9	9.8	12.4	15.7	28.1	24.4	10.5	23.7	10.9	0.64	2.4	5.5	0.50	49.6	25.0	24.0	0.43	5.57	2.25	0.95	6.0	20	20	52	830
20	ODP	254/6T	208-230/460	1770	93	0.81	5.9	9.8	12.4	15.7	28.1	21.5	9.5	21.7	9.9	0.64	2.4	5.5	0.50	45.0	20.5	24.0	0.43	4.32	2.25	0.95	4.8	19	19	48	676
20	TEFC	254/6T	208-230/460	1765	93	0.84	5.9	9.8	12.4	15.7	28.1	24.4	10.5	23.7	10.9	0.64	2.4	5.5	0.50	49.6	25.0	24.0	0.43	5.57	2.25	0.95	6.0	20	20	52	880
20	ODP	254/6T	575	1770	93	0.81	5.9	9.8	12.4	15.7	28.1	21.5	9.5	21.7	9.9	0.64	2.4	5.5	0.50	45.0	20.5	24.0	0.43	4.32	2.25	0.95	4.8	19	19	48	675
20	TEFC	254/6T	575	1765	93	0.84	5.9	9.8	12.4	15.7	28.1	24.4	10.5	23.7	10.9	0.64	2.4	5.5	0.50	49.6	25.0	24.0	0.43	5.57	2.25	0.95	6.0	20	20	52	878
25	ODP	284T	208-230/460	1770	93.6	0.84	5.9	9.8	12.4	15.7	28.1	24.5	11.9	23.7	10.9	0.64	2.4	5.5	0.50	47.7	23.2	24.0	0.43	5.57	2.25	0.95	6.0	20	20	52	879
25	TEFC	284/6T	208-230/460	1765	93.6	0.84	5.9	9.8	12.4	15.7	28.1	24.9	11.1	23.7	10.9	0.64	2.4	5.5	0.50	52.5	27.9	24.0	0.48	5.52	2.25	0.95	6.0	20	20	52	943
25	ODP	284T	575	1770	93.6	0.84	5.9	9.8	12.4	15.7	28.1	24.5	11.9	23.7	10.9	0.64	2.4	5.5	0.50	47.7	23.2	24.0	0.43	5.57	2.25	0.95	6.0	20	20	52	878
25	TEFC	284/6T	575	1765	93.6	0.84	5.9	9.8	12.4	15.7	28.1	24.9	11.1	23.7	10.9	0.64	2.4	5.5	0.50	52.5	27.9	24.0	0.48	5.52	2.25	0.95	6.0	20	20	52	941
30	ODP	284/6T	208-230/460	1770	94.1	0.84	5.9	9.8	12.4	15.7	28.1	24.5	11.9	23.7	10.9	0.64	2.4	5.5	0.50	49.2	24.7	24.0	0.43	5.57	2.25	0.95	6.0	20	20	52	933
30	TEFC	284/6T	208-230/460	1765	93.6	0.84	5.9	9.8	12.4	15.7	28.1	24.9	11.1	23.7	10.9	0.64	2.4	5.5	0.50	52.5	27.9	24.0	0.48	5.52	2.25	0.95	6.0	20	20	52	987
30	ODP	284/6T	575	1770	94.1	0.84	5.9	9.8	12.4	15.7	28.1	24.5	11.9	23.7	10.9	0.64	2.4	5.5	0.50	49.2	24.7	24.0	0.43	5.57	2.25	0.95	6.0	20	20	52	932
30	TEFC	284/6T	575	1765	93.6	0.84	5.9	9.8	12.4	15.7	28.1	24.9	11.1	23.7	10.9	0.64	2.4	5.5	0.50	52.5	27.9	24.0	0.48	5.52	2.25	0.95	6.0	20	20	52	985

Submittal Data Sheet

Wilo NL-HE – Base Mounted End Suction Pumps

NL-HE 6 x 5 x 10 (4 Pole)

Project:	
Engineer:	
Contractor:	
Submitted By:	Date:
Approved By:	Date:

Tag #	Model #	Flow (USGPM)	Head (Feet)	HP	Enclosure	Frame	Cycle	Phase	Voltage	RPM
	NL-HE 6 x 5 x 10						**60Hz**	**3**		

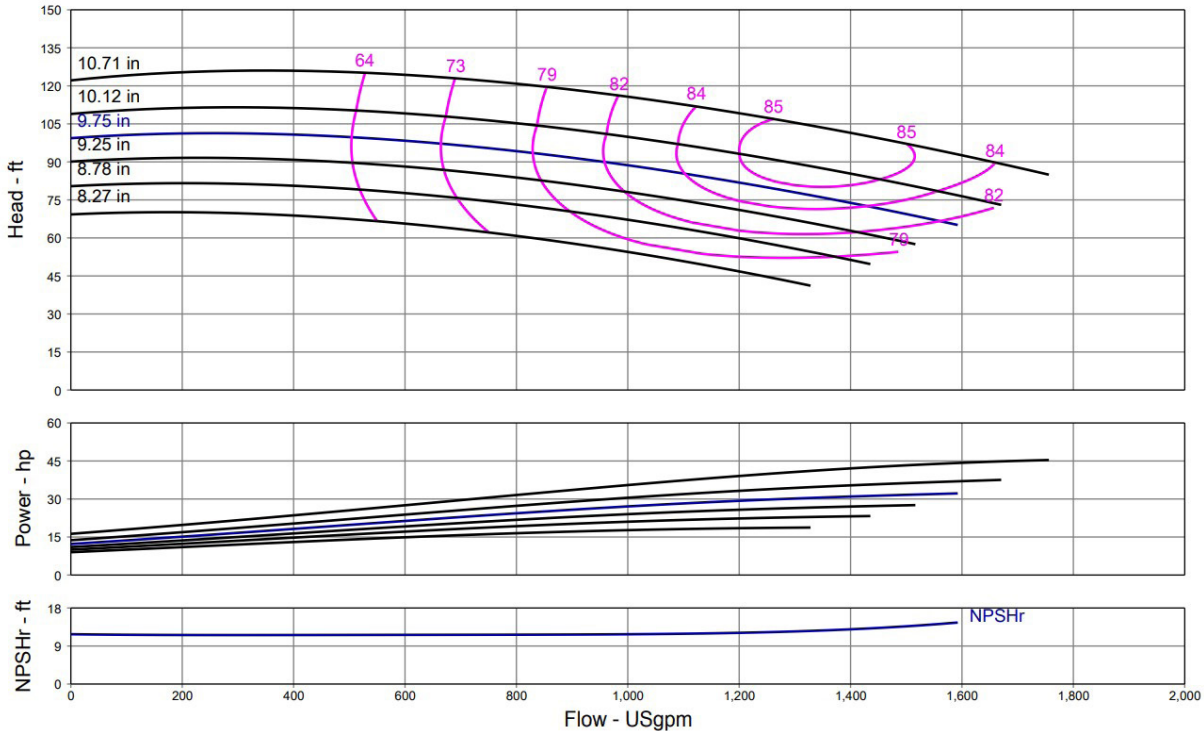

Technical Data	
PEI	
0.94	
Approved Fluids	
Heating Water	
Cooling and cold water	
Pressure /Temperature Ratings	
Ambient Temperature:	+5 °F to +104 °F (-15 °C to +40 °C)
Max Working Pressure & Temperature:	189 psi (up to 284 °F Fluid Temperature) 232 psi (up to 248 °F Fluid Temperature)
Water-Glycol Mixtures for 20-40% glycol and fluid temp ≤ 104°F (40°C)	

Materials of Construction		
☐	Pump Housing	EN-GL-250 Gray Cast Iron
☐	Impeller	EN 1.4408 Cast Stainless Steel
☐	Impeller (optional)	CC480K Bronze or EN-GJL 1030 Cast Iron
☐	Pump Shaft	1.4021 + QT700 Stainless Steel
☐	Mechanical Seal	Carbon/silicon carbide/ EPDM (E1)
☐	Other Mechanical Seals	Avail. on request
☐	Additional Spacer Coupling	Avail. on request
☐	Other:	

Approval Stamp

Submittal Data Sheet

Wilo NL-HE - Base Mounted End Suction Pumps

Dimensions & Weights

Wilo NL-HE

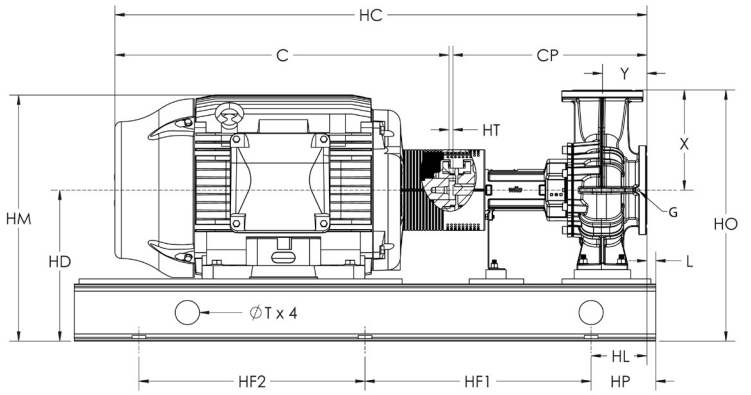

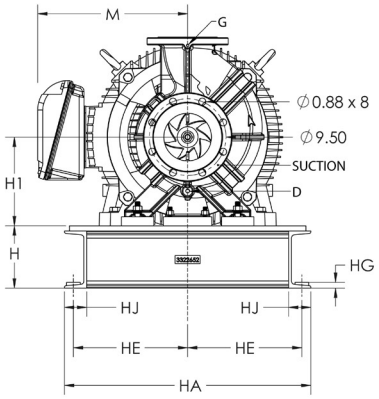

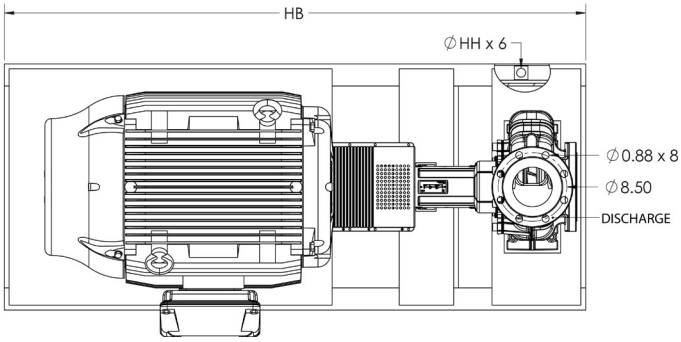

FLANGES/CONNECTIONS	
SUCTION	6" ASME B16.1-CLASS 125
DISCHARGE	5" ASME B16.1-CLASS 125
G	DIN 3858-Rp1/8" BSPP
D	DIN 3858-Rp3/8" BSPP

NL-HE 6 x 5 x 10

Motor							Dimensions - Inches																								
HP	ENCL	Frame	Volt	RPM	EFF	PF	H	H1	X	HD	HO	HM	M	HA	HE	HG	HJ	Y	HT	HC	C	CP	L	HL	T	HH	HP	HF1	HF2	HB	Wt. (lb)
20	ODP	254/6T	208-230/460	1770	93	0.81	5.9	9.8	14.0	15.7	29.7	21.5	9.5	21.7	9.9	0.64	2.4	5.5	0.50	45.0	20.5	24.0	0.43	4.32	2.25	0.95	4.8	19	19	48	695
20	TEFC	254/6T	208-230/460	1765	93	0.84	5.9	9.8	14.0	15.7	29.7	24.4	10.5	23.7	10.9	0.64	2.4	5.5	0.50	49.6	25.0	24.0	0.43	5.57	2.25	0.95	6.0	20	20	52	898
20	ODP	254/6T	575	1770	93	0.81	5.9	9.8	14.0	15.7	29.7	21.5	9.5	21.7	9.9	0.64	2.4	5.5	0.50	45.0	20.5	24.0	0.43	4.32	2.25	0.95	4.8	19	19	48	694
20	TEFC	254/6T	575	1765	93	0.84	5.9	9.8	14.0	15.7	29.7	24.4	10.5	23.7	10.9	0.64	2.4	5.5	0.50	49.6	25.0	24.0	0.43	5.57	2.25	0.95	6.0	20	20	52	896
25	ODP	284T	208-230/460	1770	93.6	0.84	5.9	9.8	14.0	15.7	29.7	24.5	11.9	23.7	10.9	0.64	2.4	5.5	0.50	47.7	23.2	24.0	0.43	5.57	2.25	0.95	6.0	20	20	52	898
25	TEFC	284/6T	208-230/460	1765	93.6	0.84	5.9	9.8	14.0	15.7	29.7	24.9	11.1	23.7	10.9	0.64	2.4	5.5	0.50	52.5	27.9	24.0	0.48	5.52	2.25	0.95	6.0	20	20	52	962
25	ODP	284T	575	1770	93.6	0.84	5.9	9.8	14.0	15.7	29.7	24.5	11.9	23.7	10.9	0.64	2.4	5.5	0.50	47.7	23.2	24.0	0.43	5.57	2.25	0.95	6.0	20	20	52	897
25	TEFC	284/6T	575	1765	93.6	0.84	5.9	9.8	14.0	15.7	29.7	24.9	11.1	23.7	10.9	0.64	2.4	5.5	0.50	52.5	27.9	24.0	0.48	5.52	2.25	0.95	6.0	20	20	52	960
30	ODP	284/6T	208-230/460	1770	94.1	0.84	5.9	9.8	14.0	15.7	29.7	24.5	11.9	23.7	10.9	0.64	2.4	5.5	0.50	49.2	24.7	24.0	0.43	5.57	2.25	0.95	6.0	20	20	52	951
30	TEFC	284/6T	208-230/460	1765	93.6	0.84	5.9	9.8	14.0	15.7	29.7	24.9	11.1	23.7	10.9	0.64	2.4	5.5	0.50	52.5	27.9	24.0	0.48	5.52	2.25	0.95	6.0	20	20	52	1005
30	ODP	284/6T	575	1770	94.1	0.84	5.9	9.8	14.0	15.7	29.7	24.5	11.9	23.7	10.9	0.64	2.4	5.5	0.50	49.2	24.7	24.0	0.43	5.57	2.25	0.95	6.0	20	20	52	950
30	TEFC	284/6T	575	1765	93.6	0.84	5.9	9.8	14.0	15.7	29.7	24.9	11.1	23.7	10.9	0.64	2.4	5.5	0.50	52.5	27.9	24.0	0.48	5.52	2.25	0.95	6.0	20	20	52	1003
40	ODP	324T	208-230/460	1775	94.1	0.84	5.9	9.8	14.0	15.7	29.7	25.5	13.4	23.7	10.9	0.64	2.4	5.5	0.50	50.3	25.8	24.0	0.43	5.57	2.25	0.95	6.0	20	20	52	997
40	TEFC	324/6T	208-230/460	1770	94.1	0.85	6.0	9.8	14.0	15.8	29.8	26.2	12.6	26.7	12.4	0.64	2.4	5.5	0.50	55.6	31.1	24.0	0.88	6.12	2.25	0.95	7.0	22	22	58	1198
40	ODP	324T	575	1775	94.1	0.84	5.9	9.8	14.0	15.7	29.7	25.5	13.4	23.7	10.9	0.64	2.4	5.5	0.50	50.3	25.8	24.0	0.43	5.57	2.25	0.95	6.0	20	20	52	995
40	TEFC	324/6T	575	1770	94.1	0.85	6.0	9.8	14.0	15.8	29.8	26.2	12.6	26.7	12.4	0.64	2.4	5.5	0.50	55.6	31.1	24.0	0.88	6.12	2.25	0.95	7.0	22	22	58	1195
50	ODP	324/6T	208-230/460	1775	94.5	0.84	5.9	9.8	14.0	15.7	29.7	25.5	13.4	23.7	10.9	0.64	2.4	5.5	0.50	51.8	27.3	24.0	0.43	5.57	2.25	0.95	6.0	20	20	52	1070
50	TEFC	324/6T	208-230/460	1775	94.5	0.83	6.0	9.8	14.0	15.8	29.8	26.2	12.6	26.7	12.4	0.64	2.4	5.5	0.50	55.6	31.1	24.0	0.88	6.12	2.25	0.95	7.0	22	22	58	1229
50	ODP	324/6T	575	1775	94.5	0.84	5.9	9.8	14.0	15.7	29.7	25.5	13.4	23.7	10.9	0.64	2.4	5.5	0.50	51.8	27.3	24.0	0.43	5.57	2.25	0.95	6.0	20	20	52	1067
50	TEFC	324/6T	575	1775	94.5	0.83	6.0	9.8	14.0	15.8	29.8	26.2	12.6	26.7	12.4	0.64	2.4	5.5	0.50	55.6	31.1	24.0	0.88	6.12	2.25	0.95	7.0	22	22	58	1226

Submittal Data Sheet

Wilo NL-HE – Base Mounted End Suction Pumps

NL-HE 6 x 5 x 12 (4 Pole)

Project:	
Engineer:	
Contractor:	
Submitted By:	Date:
Approved By:	Date:

Tag #	Model #	Flow (USGPM)	Head (Feet)	HP	Enclosure	Frame	Cycle	Phase	Voltage	RPM
	NL-HE 6 x 5 x 12						**60Hz**	**3**		

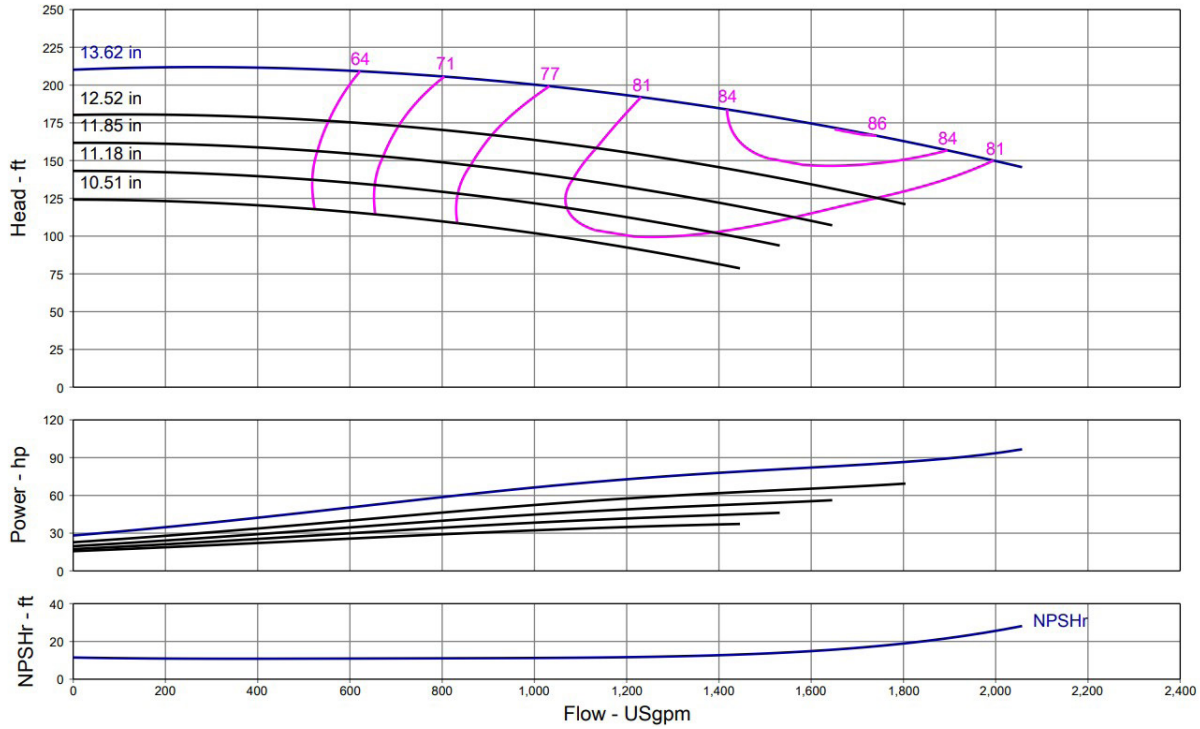

Technical Data	
PEI	
0.95	
Approved Fluids	
Heating Water	
Cooling and cold water	
Pressure /Temperature Ratings	
Ambient Temperature:	+5 °F to +104 °F (-15 °C to +40 °C)
Max Working Pressure & Temperature:	189 psi (up to 284 °F Fluid Temperature) 232 psi (up to 248 °F Fluid Temperature)
Water-Glycol Mixtures for 20-40% glycol and fluid temp ≤ 104°F (40°C)	

Materials of Construction		
☐	Pump Housing	EN-GL-250 Gray Cast Iron
☐	Impeller	EN 1.4408 Cast Stainless Steel
☐	Impeller (optional)	CC480K Bronze or EN-GJL 1030 Cast Iron
☐	Pump Shaft	1.4021 + QT700 Stainless Steel
☐	Mechanical Seal	Carbon/silicon carbide/ EPDM (E1)
☐	Other Mechanical Seals	Avail. on request
☐	Additional Spacer Coupling	Avail. on request
☐	Other:	

Approval Stamp

Submittal Data Sheet

Wilo NL-HE - Base Mounted End Suction Pumps

Dimensions & Weights

Wilo NL-HE

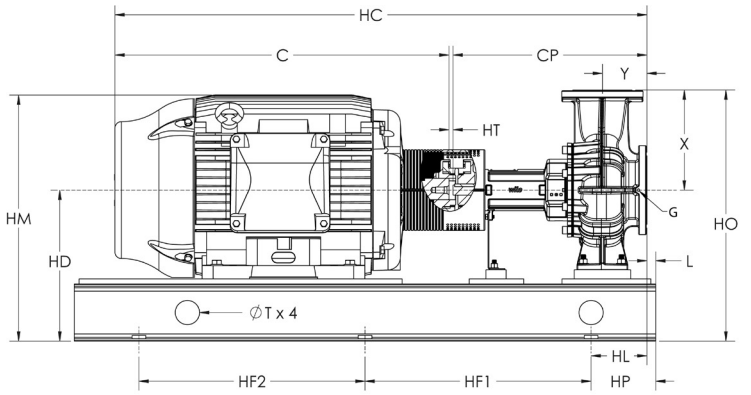

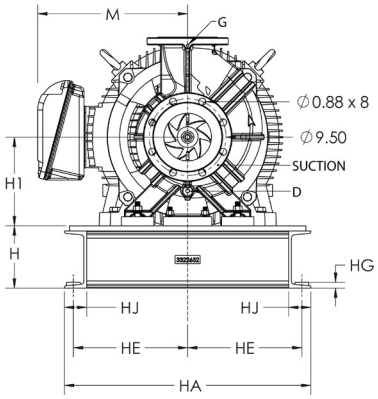

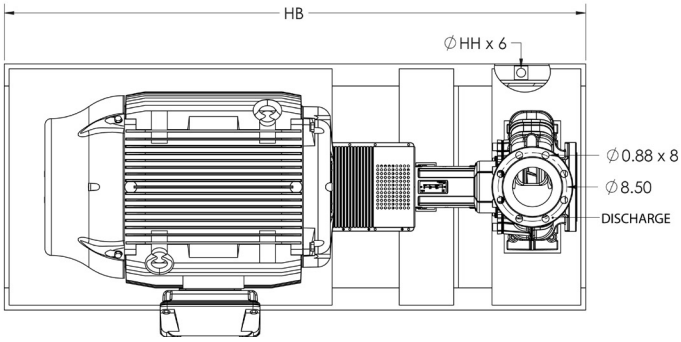

FLANGES/CONNECTIONS	
SUCTION	6" ASME B16.1-CLASS 125
DISCHARGE	5" ASME B16.1-CLASS 125
G	DIN 3858-Rp1/8" BSPP
D	DIN 3858-Rp3/8" BSPP

NL-HE 6 x 5 x 12

Motor							Dimensions - Inches																								
HP	ENCL	Frame	Volt	RPM	EFF	PF	H	H1	X	HD	HO	HM	M	HA	HE	HG	HJ	Y	HT	HC	C	CP	L	HL	T	HH	HP	HF1	HF2	HB	Wt. (lb)
40	ODP	324T	208-230/460	1775	94.1	0.84	5.9	11	14.0	16.9	30.9	26.7	13.4	26.2	12.2	0.64	2.4	5.5	0.50	52.7	25.8	26.4	1.13	5.37	2.25	0.95	6.5	21	21	55	1157
40	TEFC	324/6T	208-230/460	1770	94.1	0.85	6.0	11	14.0	17.0	31.0	27.4	12.6	26.2	12.2	0.64	2.4	5.5	0.50	58.0	31.1	26.4	1.18	5.82	2.25	0.95	7.0	23	23	60	1321
40	ODP	324T	575	1775	94.1	0.84	5.9	11	14.0	16.9	30.9	26.7	13.4	26.2	12.2	0.64	2.4	5.5	0.50	52.7	25.8	26.4	1.13	5.37	2.25	0.95	6.5	21	21	55	1155
40	TEFC	324/6T	575	1770	94.1	0.85	6.0	11	14.0	17.0	31.0	27.4	12.6	26.2	12.2	0.64	2.4	5.5	0.50	58.0	31.1	26.4	1.18	5.82	2.25	0.95	7.0	23	23	60	1318
50	ODP	324/6T	208-230/460	1775	94.5	0.84	5.9	11	14.0	16.9	30.9	26.7	13.4	26.2	12.2	0.64	2.4	5.5	0.50	54.2	27.3	26.4	1.13	5.37	2.25	0.95	6.5	21	21	55	1220
50	TEFC	324/6T	208-230/460	1775	94.5	0.83	6.0	11	14.0	17.0	31.0	27.4	12.6	26.2	12.2	0.64	2.4	5.5	0.50	58.0	31.1	26.4	1.18	5.82	2.25	0.95	7.0	23	23	60	1342
50	ODP	324/6T	575	1775	94.5	0.84	5.9	11	14.0	16.9	30.9	26.7	13.4	26.2	12.2	0.64	2.4	5.5	0.50	54.2	27.3	26.4	1.13	5.37	2.25	0.95	6.5	21	21	55	1217
50	TEFC	324/6T	575	1775	94.5	0.83	6.0	11	14.0	17.0	31.0	27.4	12.6	26.2	12.2	0.64	2.4	5.5	0.50	58.0	31.1	26.4	1.18	5.82	2.25	0.95	7.0	23	23	60	1339
60	ODP	364/5T	208-230/460	1780	95	0.85	6.0	11	14.0	17.0	31.0	29.2	15.6	26.2	12.2	0.64	2.4	5.5	0.50	56.5	29.7	26.4	1.18	5.82	2.25	0.95	7.0	23	23	60	1487
60	TEFC	364/5T	208-230/460	1780	95	0.83	6.1	11	14.0	17.1	31.1	26.1	16.0	28.7	13.4	0.64	2.4	5.5	0.50	61.4	34.5	26.4	1.28	6.72	2.25	0.95	8.0	25	25	66	1713
60	ODP	364/5T	575	1780	95	0.85	6.0	11	14.0	17.0	31.0	29.2	15.6	26.2	12.2	0.64	2.4	5.5	0.50	56.5	29.7	26.4	1.18	5.82	2.25	0.95	7.0	23	23	60	1484
60	TEFC	364/5T	575	1780	95	0.83	6.1	11	14.0	17.1	31.1	26.1	16.0	28.7	13.4	0.64	2.4	5.5	0.50	61.4	34.5	26.4	1.28	6.72	2.25	0.95	8.0	25	25	66	1706
75	ODP	364/5T	208-230/460	1780	95	0.85	6.0	11	14.0	17.0	31.0	29.2	15.6	26.2	12.2	0.64	2.4	5.5	0.50	56.5	29.7	26.4	1.18	5.82	2.25	0.95	7.0	23	23	60	1533
75	TEFC	364/5T	208-230/460	1780	95.4	0.83	6.1	11	14.0	17.1	31.1	26.1	16.0	28.7	13.4	0.64	2.4	5.5	0.50	61.4	34.5	26.4	1.28	6.72	2.25	0.95	8.0	25	25	66	1775
75	ODP	364/5T	575	1780	95	0.85	6.0	11	14.0	17.0	31.0	29.2	15.6	26.2	12.2	0.64	2.4	5.5	0.50	56.5	29.7	26.4	1.18	5.82	2.25	0.95	7.0	23	23	60	1530
75	TEFC	364/5T	575	1780	95.4	0.83	6.1	11	14.0	17.1	31.1	26.1	16.0	28.7	13.4	0.64	2.4	5.5	0.50	61.4	34.5	26.4	1.28	6.72	2.25	0.95	8.0	25	25	66	1771
100	ODP	404/5T	208-230/460	1780	95.4	0.86	6.1	11	14.0	17.1	31.1	29.3	15.6	29.7	13.9	0.64	2.4	5.5	0.50	61.0	34.1	26.4	1.28	6.72	2.25	0.95	8.0	25	25	66	1803
100	TEFC	404/5T	208-230/460	1780	95.4	0.87	6.1	11	14.0	17.1	31.1	26.7	16.0	29.7	13.9	0.64	2.4	5.5	0.50	66.6	39.7	26.4	1.28	6.72	2.25	0.95	8.0	25	25	66	2018
100	ODP	404/5T	575	1780	95.4	0.86	6.1	11	14.0	17.1	31.1	29.3	15.6	29.7	13.9	0.64	2.4	5.5	0.50	61.0	34.1	26.4	1.28	6.72	2.25	0.95	8.0	25	25	66	1797
100	TEFC	404/5T	575	1780	95.4	0.87	6.1	11	14.0	17.1	31.1	26.7	16.0	29.7	13.9	0.64	2.4	5.5	0.50	66.6	39.7	26.4	1.28	6.72	2.25	0.95	8.0	25	25	66	2011

Submittal Data Sheet

Wilo NL-HE – Base Mounted End Suction Pumps

NL-HE 6 x 5 x 16 (4 Pole)

Project:	
Engineer:	
Contractor:	
Submitted By:	Date:
Approved By:	Date:

Tag #	Model #	Flow (USGPM)	Head (Feet)	HP	Enclosure	Frame	Cycle	Phase	Voltage	RPM
	NL-HE 6 x 5 x 16						**60Hz**	**3**		

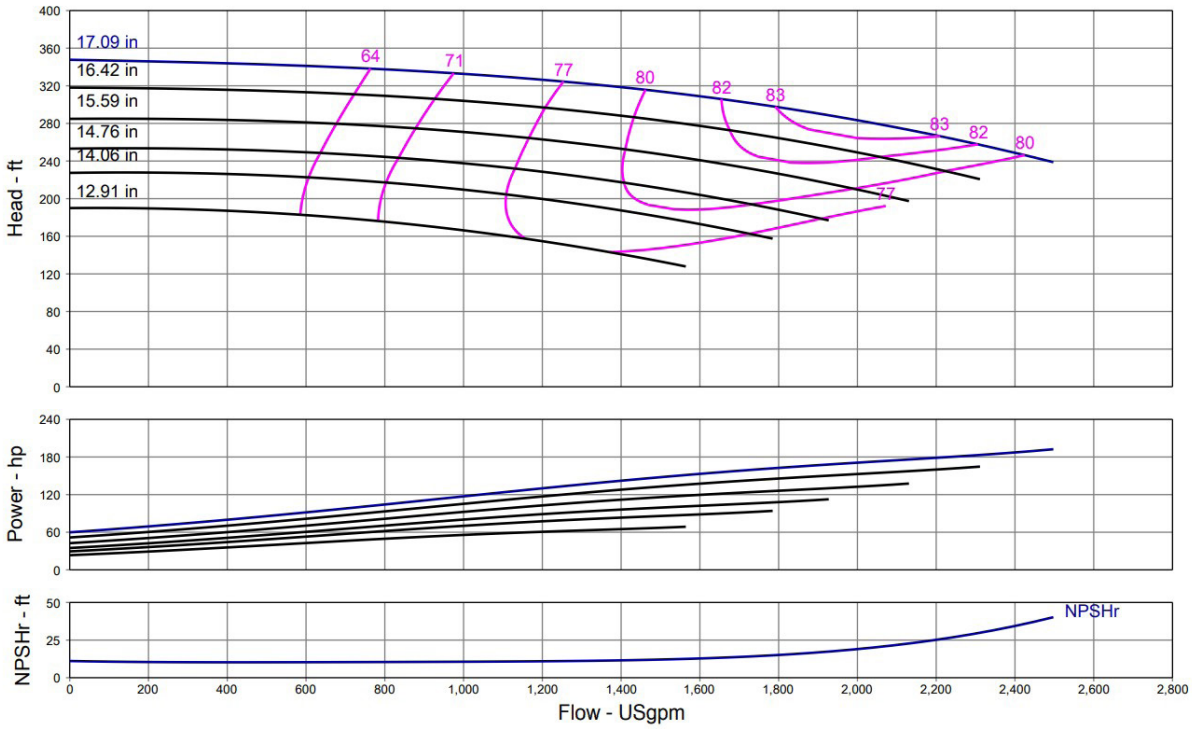

Technical Data	
PEI	
0.92	
Approved Fluids	
Heating Water	
Cooling and cold water	
Pressure /Temperature Ratings	
Ambient Temperature:	+5 °F to +104 °F (-15 °C to +40 °C)
Max Working Pressure & Temperature:	189 psi (up to 284 °F Fluid Temperature) 232 psi (up to 248 °F Fluid Temperature)
Water-Glycol Mixtures for 20-40% glycol and fluid temp ≤ 104°F (40°C)	

Materials of Construction		
☐	Pump Housing	EN-GL-250 Gray Cast Iron
☐	Impeller	EN 1.4408 Cast Stainless Steel
☐	Impeller (optional)	CC480K Bronze or EN-GJL 1030 Cast Iron
☐	Pump Shaft	1.4021 + QT700 Stainless Steel
☐	Mechanical Seal	Carbon/silicon carbide/ EPDM (E1)
☐	Other Mechanical Seals	Avail. on request
☐	Additional Spacer Coupling	Avail. on request
☐	Other:	

Approval Stamp

Submittal Data Sheet

Wilo NL-HE - Base Mounted End Suction Pumps

Dimensions & Weights

Wilo NL-HE

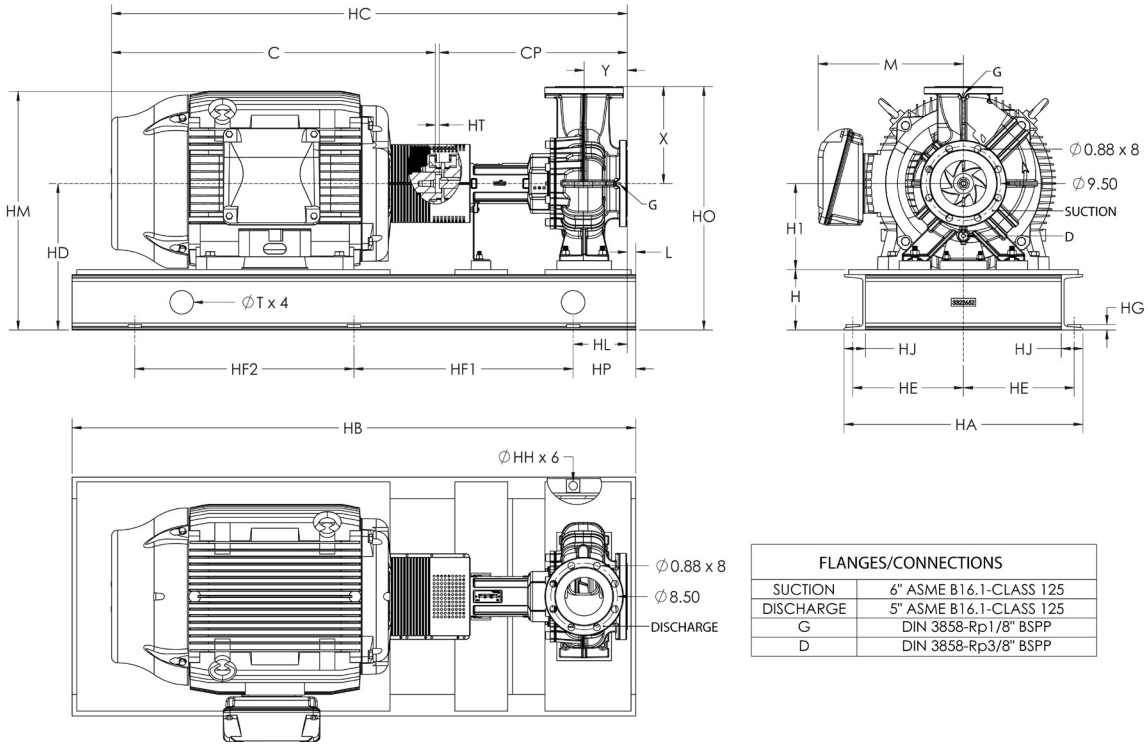

FLANGES/CONNECTIONS	
SUCTION	6" ASME B16.1-CLASS 125
DISCHARGE	5" ASME B16.1-CLASS 125
G	DIN 3858-Rp1/8" BSPP
D	DIN 3858-Rp3/8" BSPP

NL-HE 6 x 5 x 16

Motor							Dimensions - Inches																								
HP	ENCL	Frame	Volt	RPM	EFF	PF	H	H1	X	HD	HO	HM	M	HA	HE	HG	HJ	Y	HT	HC	C	CP	L	HL	T	HH	HP	HF1	HF2	HB	Wt. (lb)
75	ODP	364/5T	208-230/460	1780	95	0.85	6.0	12.4	15.7	18.4	34.1	30.6	15.6	26.2	12.2	0.64	2.4	5.5	0.50	56.5	29.7	26.4	1.18	5.82	2.25	0.95	7.0	23	23	60	1659
75	TEFC	364/5T	208-230/460	1780	95.4	0.83	6.1	12.4	15.7	18.5	34.2	27.5	16.0	28.7	13.4	0.64	2.4	5.5	0.50	61.4	34.5	26.4	1.28	6.72	2.25	0.95	8.0	25	25	66	1901
75	ODP	364/5T	575	1780	95	0.85	6.0	12.4	15.7	18.4	34.1	30.6	15.6	26.2	12.2	0.64	2.4	5.5	0.50	56.5	29.7	26.4	1.18	5.82	2.25	0.95	7.0	23	23	60	1656
75	TEFC	364/5T	575	1780	95.4	0.83	6.1	12.4	15.7	18.5	34.2	27.5	16.0	28.7	13.4	0.64	2.4	5.5	0.50	61.4	34.5	26.4	1.28	6.72	2.25	0.95	8.0	25	25	66	1897
100	ODP	404/5T	208-230/460	1780	95.4	0.86	6.1	12.4	15.7	18.5	34.2	30.7	15.6	29.7	13.9	0.64	2.4	5.5	0.50	61.0	34.1	26.4	1.28	6.72	2.25	0.95	8.0	25	25	66	1934
100	TEFC	404/5T	208-230/460	1780	95.4	0.87	6.1	12.4	15.7	18.5	34.2	28.0	16.0	29.7	13.9	0.64	2.4	5.5	0.50	66.6	39.7	26.4	1.28	6.72	2.25	0.95	8.0	25	25	66	2149
100	ODP	404/5T	575	1780	95.4	0.86	6.1	12.4	15.7	18.5	34.2	30.7	15.6	29.7	13.9	0.64	2.4	5.5	0.50	61.0	34.1	26.4	1.28	6.72	2.25	0.95	8.0	25	25	66	1928
100	TEFC	404/5T	575	1780	95.4	0.87	6.1	12.4	15.7	18.5	34.2	28.0	16.0	29.7	13.9	0.64	2.4	5.5	0.50	66.6	39.7	26.4	1.28	6.72	2.25	0.95	8.0	25	25	66	2142
125	ODP	404/5T	208-230/460	1780	95.4	0.86	6.1	12.4	15.7	18.5	34.2	30.7	15.6	29.7	13.9	0.64	2.4	5.5	0.50	61.0	34.1	26.4	1.28	6.72	2.25	0.95	8.0	25	25	66	2010
125	TEFC	444/5T	208-230/460	1780	95.4	0.85	7.7	12.4	15.7	20.1	35.9	31.9	18.6	31.5	14.7	0.72	2.8	5.5	1.40	72.9	45.1	26.4	1.58	5.92	3.00	1.10	7.5	30	30	75	2796
125	ODP	404/5T	575	1780	95.4	0.86	6.1	12.4	15.7	18.5	34.2	30.7	15.6	29.7	13.9	0.64	2.4	5.5	0.50	61.0	34.1	26.4	1.28	6.72	2.25	0.95	8.0	25	25	66	2005
125	TEFC	444/5T	575	1780	95.4	0.85	7.7	12.4	15.7	20.1	35.9	31.9	18.6	31.5	14.7	0.72	2.8	5.5	1.40	72.9	45.1	26.4	1.58	5.92	3.00	1.10	7.5	30	30	75	2792
150	ODP	444/5T	460	1784	95.8	0.85	6.1	12.4	15.7	18.5	34.2	33.0	18.7	29.7	13.9	0.64	2.4	5.5	1.40	66.1	38.3	26.4	1.28	6.72	2.25	0.95	8.0	25	25	66	2340
150	TEFC	444/5T	208-230/460	1780	95.8	0.85	7.7	12.4	15.7	20.1	35.9	31.9	18.6	31.5	14.7	0.72	2.8	5.5	1.40	72.9	45.1	26.4	1.58	5.92	3.00	1.10	7.5	30	30	75	3006
150	ODP	444/5T	575	1784	95.8	0.85	6.1	12.4	15.7	18.5	34.2	33.0	18.7	29.7	13.9	0.64	2.4	5.5	1.40	66.1	38.3	26.4	1.28	6.72	2.25	0.95	8.0	25	25	66	2336
150	TEFC	444/5T	575	1780	95.8	0.85	7.7	12.4	15.7	20.1	35.9	31.9	18.6	31.5	14.7	0.72	2.8	5.5	1.40	72.9	45.1	26.4	1.58	5.92	3.00	1.10	7.5	30	30	75	2997
200	ODP	444/5T	460	1783	95.8	0.84	6.1	12.4	15.7	18.5	34.2	33.0	18.7	29.7	13.9	0.64	2.4	5.5	1.40	67.6	39.8	26.4	1.28	6.72	2.25	0.95	8.0	25	25	66	2415
200	TEFC	445/7T	208-230/460	1785	96.2	0.85	7.7	12.4	15.7	20.1	35.9	36.6	20.6	31.5	14.7	0.72	2.8	5.5	1.40	76.5	48.7	26.4	1.68	5.82	3.00	1.10	7.5	30	30	75	3451
200	ODP	444/5T	575	1780	95	0.84	6.1	12.4	15.7	18.5	34.2	33.0	18.7	29.7	13.9	0.64	2.4	5.5	1.40	67.6	39.8	26.4	1.28	6.72	2.25	0.95	8.0	25	25	66	2415
200	TEFC	445/7T	575	1785	96.2	0.85	7.7	12.4	15.7	20.1	35.9	36.6	20.6	31.5	14.7	0.72	2.8	5.5	1.40	76.5	48.7	26.4	1.68	5.82	3.00	1.10	7.5	30	30	75	3434