Submittal Data Sheet

Wilo NL-HE – Base Mounted End Suction Pumps

NL-HE 2.5 x 1.5 x 5 (2 Pole)

Project:	
Engineer:	
Contractor:	
Submitted By:	Date:
Approved By:	Date:

Tag #	Model #	Flow (USGPM)	Head (Feet)	HP	Enclosure	Frame	Cycle	Phase	Voltage	RPM
	NL-HE 2.5 x 1.5 x 5						**60Hz**	**3**		

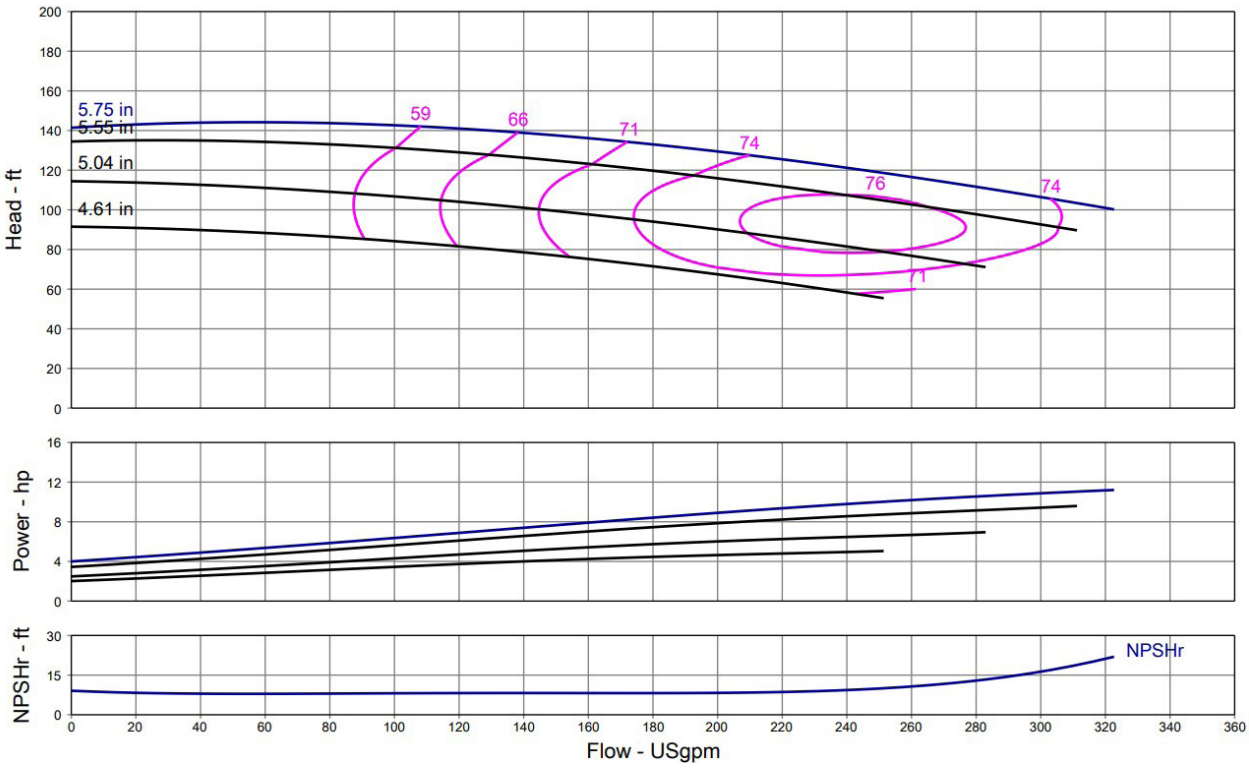

Technical Data

PEI	
0.94	
Approved Fluids	
Heating Water	
Cooling and cold water	
Pressure /Temperature Ratings	
Ambient Temperature:	+5 °F to +104 °F (-15 °C to +40 °C)
Max Working Pressure & Temperature:	189 psi (up to 284 °F Fluid Temperature) 232 psi (up to 248 °F Fluid Temperature)
Water-Glycol Mixtures for 20-40% glycol and fluid temp ≤ 104°F (40°C)	

Materials of Construction

☐	Pump Housing	EN-GL-250 Gray Cast Iron
☐	Impeller	EN 1.4408 Cast Stainless Steel
☐	Impeller (optional)	CC480K Bronze or EN-GJL 1030 Cast Iron
☐	Pump Shaft	1.4021 + QT700 Stainless Steel
☐	Mechanical Seal	Carbon/silicon carbide/ EPDM (E1)
☐	Other Mechanical Seals	Avail. on request
☐	Additional Spacer Coupling	Avail. on request
☐	Other:	

Approval Stamp

Submittal Data Sheet

Wilo NL-HE - Base Mounted End Suction Pumps

Dimensions & Weights

Wilo NL-HE

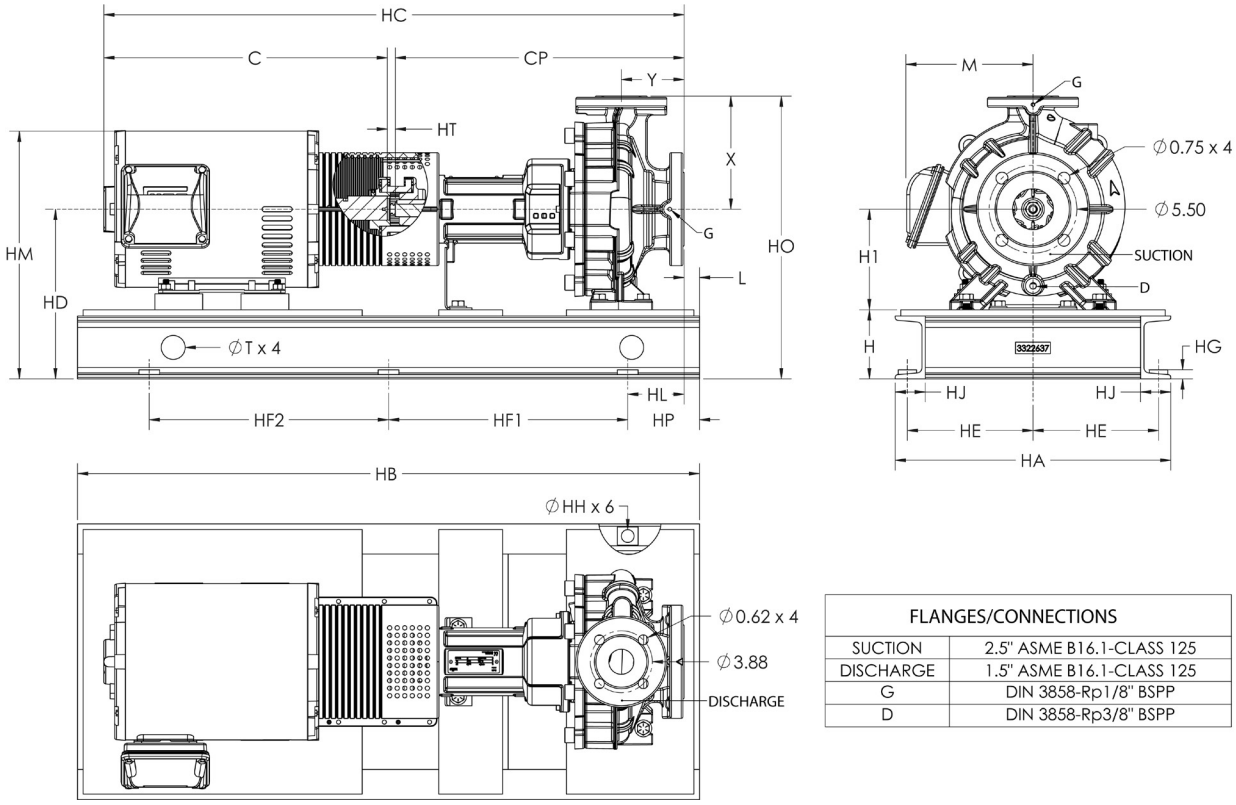

FLANGES/CONNECTIONS	
SUCTION	2.5" ASME B16.1-CLASS 125
DISCHARGE	1.5" ASME B16.1-CLASS 125
G	DIN 3858-Rp1/8" BSPP
D	DIN 3858-Rp3/8" BSPP

NL-HE 2.5 x 1.5 x 5

Motor							Dimensions - Inches																								
HP	ENCL	Frame	Volt	RPM	EFF	PF	H	H1	X	HD	HO	HM	M	HA	HE	HG	HJ	Y	HT	HC	C	CP	L	HL	T	HH	HP	HF1	HF2	HB	Wt. (lb)
7.5	ODP	182/4T	208-230/460	3500	88.5	0.9	4.3	4.5	5.5	8.8	14.3	12.9	6.7	17.3	7.9	0.57	1.9	3.1	0.50	33.0	15.2	17.3	1.75	2.75	1.50	0.80	4.5	13	13	35	265
7.5	TEFC	182/4T	208-230/460	3485	89.5	0.88	4.3	4.5	5.5	8.8	14.3	13.2	7.6	17.3	7.9	0.57	1.9	3.1	0.50	33.7	15.9	17.3	1.75	2.75	1.50	0.80	4.5	13	13	35	292
7.5	ODP	182/4T	575	3500	88.5	0.9	4.3	4.5	5.5	8.8	14.3	12.9	6.7	17.3	7.9	0.57	1.9	3.1	0.50	33.0	15.2	17.3	1.75	2.75	1.50	0.80	4.5	13	13	35	265
7.5	TEFC	213/5T	575	3520	89.5	0.88	4.3	5.2	5.5	9.6	15.1	15.2	8.6	17.3	7.9	0.57	1.9	3.1	0.50	37.3	19.5	17.3	1.75	2.75	1.50	0.80	4.5	15	15	39	366
10	ODP	213/5T	208-230/460	3535	89.5	0.88	4.3	5.2	5.5	9.6	15.1	14.5	8.0	17.3	7.9	0.57	1.9	3.1	0.50	34.8	17.0	17.3	1.75	2.75	1.50	0.80	4.5	15	15	39	325
10	TEFC	213/5T	208-230/460	3510	90.2	0.9	4.3	5.2	5.5	9.6	15.1	15.2	8.6	17.3	7.9	0.57	1.9	3.1	0.50	37.3	19.5	17.3	1.75	2.75	1.50	0.80	4.5	15	15	39	370
10	ODP	213/5T	575	3535	89.5	0.88	4.3	5.2	5.5	9.6	15.1	14.5	8.0	17.3	7.9	0.57	1.9	3.1	0.50	34.8	17.0	17.3	1.75	2.75	1.50	0.80	4.5	15	15	39	325
10	TEFC	213/5T	575	3510	90.2	0.9	4.3	5.2	5.5	9.6	15.1	15.2	8.6	17.3	7.9	0.57	1.9	3.1	0.50	37.3	19.5	17.3	1.75	2.75	1.50	0.80	4.5	15	15	39	368
15	ODP	213/5T	208-230/460	3535	90.2	0.89	4.3	5.2	5.5	9.6	15.1	14.5	8.0	17.3	7.9	0.57	1.9	3.1	0.50	35.6	17.8	17.3	1.75	2.75	1.50	0.80	4.5	15	15	39	340
15	TEFC	254/6T	208-230/460	3530	91	0.88	4.3	6.2	5.5	10.6	16.1	19.3	10.5	20.8	9.6	0.57	1.9	3.1	0.50	42.9	25.0	17.3	1.90	2.60	1.50	0.80	4.5	18	18	45	512
15	ODP	213/5T	575	3535	90.2	0.89	4.3	5.2	5.5	9.6	15.1	14.5	8.0	17.3	7.9	0.57	1.9	3.1	0.50	35.6	17.8	17.3	1.75	2.75	1.50	0.80	4.5	15	15	39	339
15	TEFC	254/6T	575	3530	91	0.88	4.3	6.2	5.5	10.6	16.1	19.3	10.5	20.8	9.6	0.57	1.9	3.1	0.50	42.9	25.0	17.3	1.90	2.60	1.50	0.80	4.5	18	18	45	511

Submittal Data Sheet

Wilo NL-HE – Base Mounted End Suction Pumps

NL-HE 2.5 x 1.5 x 6 (2 Pole)

Project:	
Engineer:	
Contractor:	
Submitted By:	Date:
Approved By:	Date:

Tag #	Model #	Flow (USGPM)	Head (Feet)	HP	Enclosure	Frame	Cycle	Phase	Voltage	RPM
	NL-HE 2.5 x 1.5 x 6						**60Hz**	**3**		

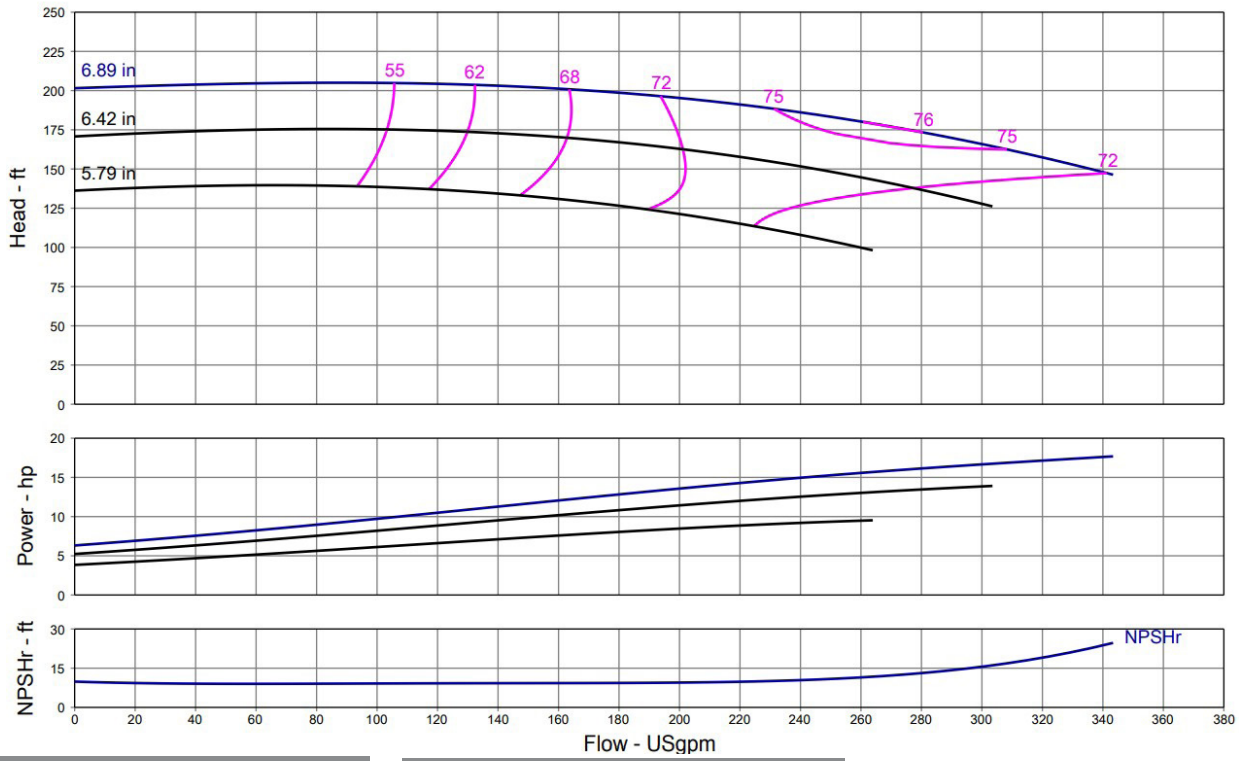

Technical Data

PEI
0.91
Approved Fluids
Heating Water
Cooling and cold water

Pressure /Temperature Ratings	
Ambient Temperature:	+5 °F to +104 °F (-15 °C to +40 °C)
Max Working Pressure & Temperature:	189 psi (up to 284 °F Fluid Temperature) 232 psi (up to 248 °F Fluid Temperature)
Water-Glycol Mixtures for 20-40% glycol and fluid temp ≤ 104°F (40°C)	

Materials of Construction

☐	Pump Housing	EN-GL-250 Gray Cast Iron
☐	Impeller	EN 1.4408 Cast Stainless Steel
☐	Impeller (optional)	CC480K Bronze or EN-GJL 1030 Cast Iron
☐	Pump Shaft	1.4021 + QT700 Stainless Steel
☐	Mechanical Seal	Carbon/silicon carbide/ EPDM (E1)
☐	Other Mechanical Seals	Avail. on request
☐	Additional Spacer Coupling	Avail. on request
☐	Other:	

Approval Stamp

Submittal Data Sheet

Wilo NL-HE – Base Mounted End Suction Pumps

Dimensions & Weights

Wilo NL-HE

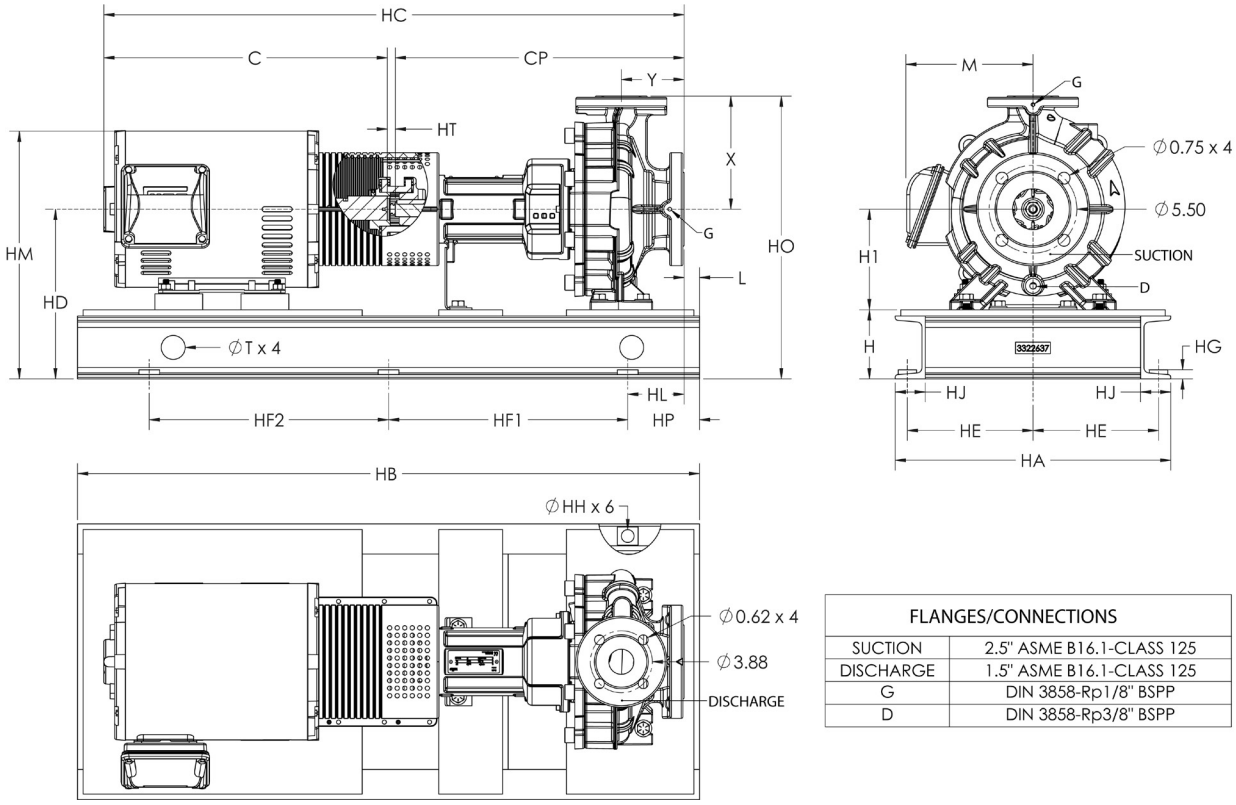

FLANGES/CONNECTIONS	
SUCTION	2.5" ASME B16.1-CLASS 125
DISCHARGE	1.5" ASME B16.1-CLASS 125
G	DIN 3858-Rp1/8" BSPP
D	DIN 3858-Rp3/8" BSPP

NL-HE 2.5 x 1.5 x 6

Motor							Dimensions – Inches																								
HP	ENCL	Frame	Volt	RPM	EFF	PF	H	H1	X	HD	HO	HM	M	HA	HE	HG	HJ	Y	HT	HC	C	CP	L	HL	T	HH	HP	HF1	HF2	HB	Wt. (lb)
10	ODP	213/5T	208-230/460	3535	89.5	0.88	4.3	5.2	6.3	9.6	15.9	14.5	8.0	17.3	7.9	0.57	1.9	3.1	0.50	34.8	17.0	17.3	1.75	2.75	1.50	0.80	4.5	15	15	39	330
10	TEFC	213/5T	208-230/460	3510	90.2	0.9	4.3	5.2	6.3	9.6	15.9	15.2	8.6	17.3	7.9	0.57	1.9	3.1	0.50	37.3	19.5	17.3	1.75	2.75	1.50	0.80	4.5	15	15	39	375
10	ODP	213/5T	575	3535	89.5	0.88	4.3	5.2	6.3	9.6	15.9	14.5	8.0	17.3	7.9	0.57	1.9	3.1	0.50	34.8	17.0	17.3	1.75	2.75	1.50	0.80	4.5	15	15	39	330
10	TEFC	213/5T	575	3510	90.2	0.9	4.3	5.2	6.3	9.6	15.9	15.2	8.6	17.3	7.9	0.57	1.9	3.1	0.50	37.3	19.5	17.3	1.75	2.75	1.50	0.80	4.5	15	15	39	373
15	ODP	213/5T	208-230/460	3535	90.2	0.89	4.3	5.2	6.3	9.6	15.9	14.5	8.0	17.3	7.9	0.57	1.9	3.1	0.50	35.6	17.8	17.3	1.75	2.75	1.50	0.80	4.5	15	15	39	345
15	TEFC	254/6T	208-230/460	3530	91	0.88	4.3	6.2	6.3	10.6	16.9	19.3	10.5	20.8	9.6	0.57	1.9	3.1	0.50	42.9	25.0	17.3	1.90	2.60	1.50	0.80	4.5	18	18	45	517
15	ODP	213/5T	575	3535	90.2	0.89	4.3	5.2	6.3	9.6	15.9	14.5	8.0	17.3	7.9	0.57	1.9	3.1	0.50	35.6	17.8	17.3	1.75	2.75	1.50	0.80	4.5	15	15	39	344
15	TEFC	254/6T	575	3530	91	0.88	4.3	6.2	6.3	10.6	16.9	19.3	10.5	20.8	9.6	0.57	1.9	3.1	0.50	42.9	25.0	17.3	1.90	2.60	1.50	0.80	4.5	18	18	45	516
20	ODP	254/6T	208-230/460	3525	91	0.87	4.3	6.2	6.3	10.6	16.9	16.3	9.5	20.8	9.6	0.57	1.9	3.1	0.50	38.3	20.5	17.3	1.90	2.60	1.50	0.80	4.5	18	18	45	420
20	TEFC	254/6T	208-230/460	3520	91	0.89	4.3	6.2	6.3	10.6	16.9	19.3	10.5	20.8	9.6	0.57	1.9	3.1	0.50	42.9	25.0	17.3	1.90	2.60	1.50	0.80	4.5	18	18	45	542
20	ODP	254/6T	575	3525	91	0.87	4.3	6.2	6.3	10.6	16.9	16.3	9.5	20.8	9.6	0.57	1.9	3.1	0.50	38.3	20.5	17.3	1.90	2.60	1.50	0.80	4.5	18	18	45	419
20	TEFC	254/6T	575	3520	91	0.89	4.3	6.2	6.3	10.6	16.9	19.3	10.5	20.8	9.6	0.57	1.9	3.1	0.50	42.9	25.0	17.3	1.90	2.60	1.50	0.80	4.5	18	18	45	541

Submittal Data Sheet

Wilo NL-HE – Base Mounted End Suction Pumps

NL-HE 2.5 x 1.5 x 8 (2 Pole)

Project:	
Engineer:	
Contractor:	
Submitted By:	Date:
Approved By:	Date:

Tag #	Model #	Flow (USGPM)	Head (Feet)	HP	Enclosure	Frame	Cycle	Phase	Voltage	RPM
	NL-HE 2.5 x 1.5 x 8						**60Hz**	**3**		

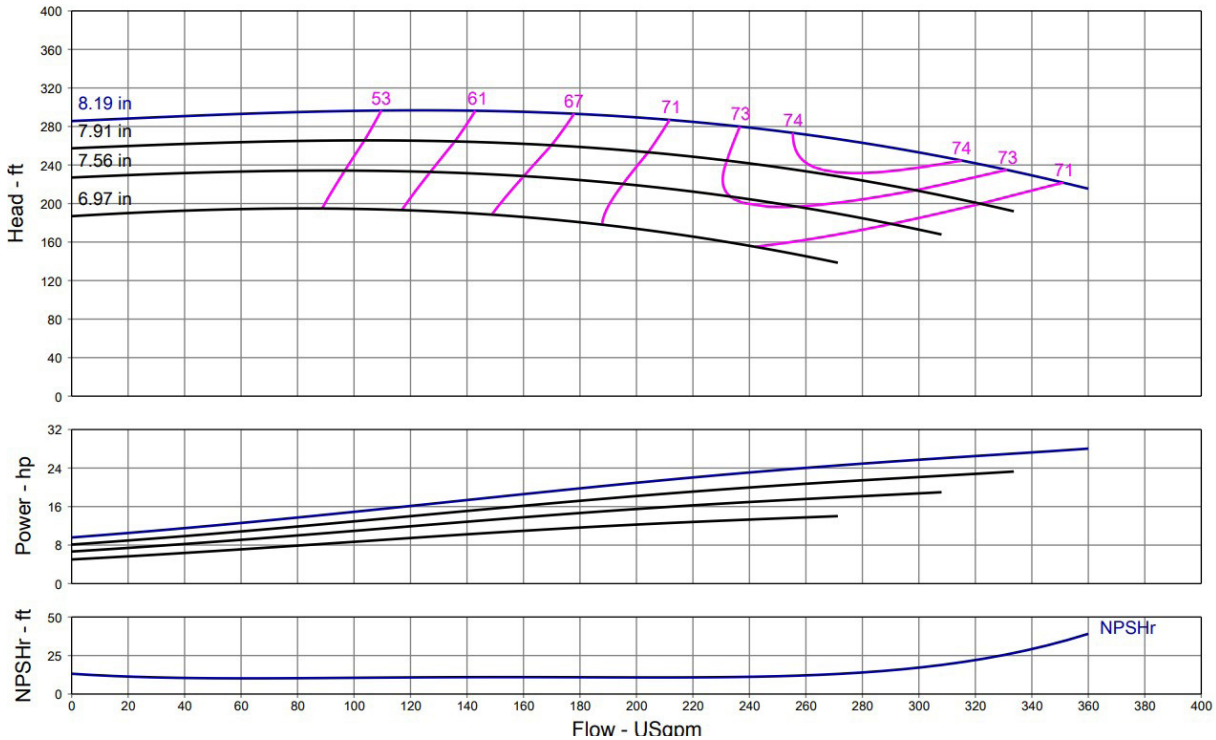

Technical Data	
PEI	
0.85	
Approved Fluids	
Heating Water	
Cooling and cold water	
Pressure /Temperature Ratings	
Ambient Temperature:	+5 °F to +104 °F (-15 °C to +40 °C)
Max Working Pressure & Temperature:	189 psi (up to 284 °F Fluid Temperature) 232 psi (up to 248 °F Fluid Temperature)
Water-Glycol Mixtures for 20-40% glycol and fluid temp ≤ 104°F (40°C)	

Materials of Construction		
☐	Pump Housing	EN-GL-250 Gray Cast Iron
☐	Impeller	EN 1.4408 Cast Stainless Steel
☐	Impeller (optional)	CC480K Bronze or EN-GJL 1030 Cast Iron
☐	Pump Shaft	1.4021 + QT700 Stainless Steel
☐	Mechanical Seal	Carbon/silicon carbide/ EPDM (E1)
☐	Other Mechanical Seals	Avail. on request
☐	Additional Spacer Coupling	Avail. on request
☐	Other:	

Approval Stamp

Submittal Data Sheet

Wilo NL-HE - Base Mounted End Suction Pumps

Dimensions & Weights

Wilo NL-HE

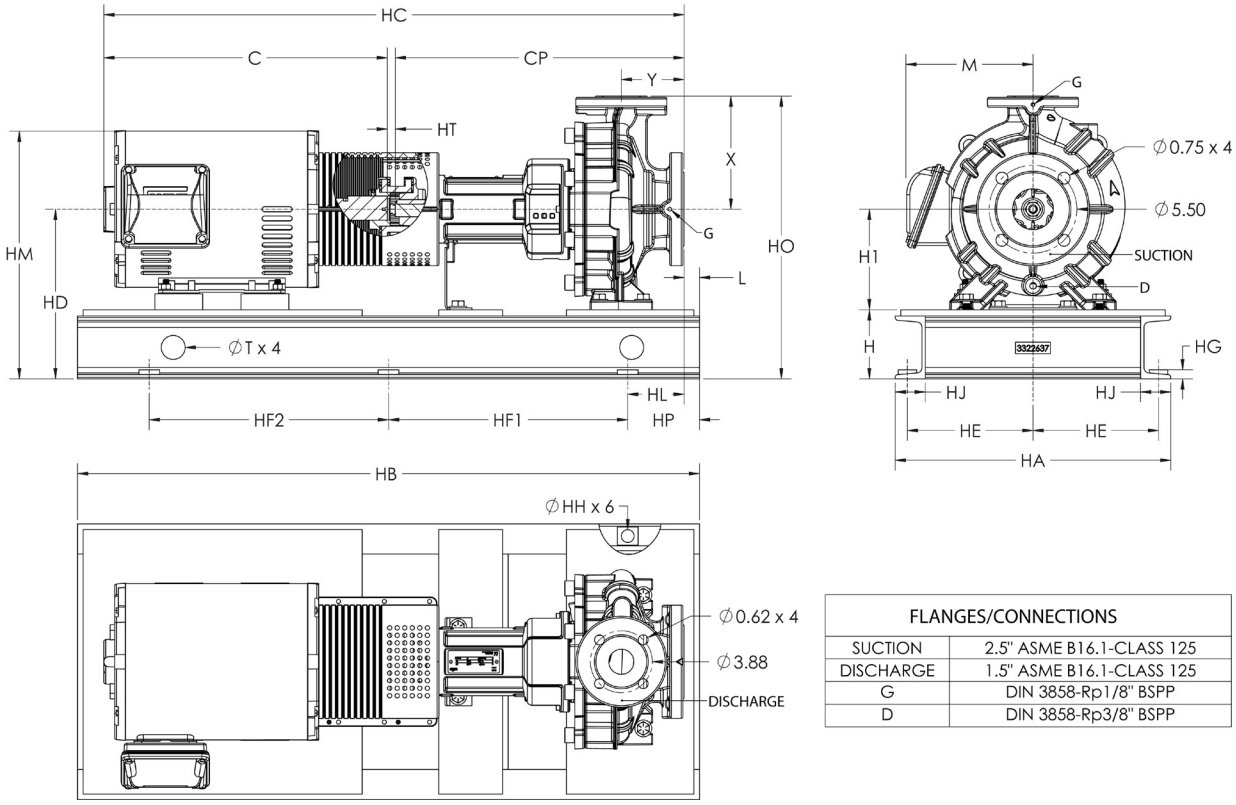

FLANGES/CONNECTIONS	
SUCTION	2.5" ASME B16.1-CLASS 125
DISCHARGE	1.5" ASME B16.1-CLASS 125
G	DIN 3858-Rp1/8" BSPP
D	DIN 3858-Rp3/8" BSPP

NL-HE 2.5 x 1.5 x 8

Motor							Dimensions - Inches																								
HP	ENCL	Frame	Volt	RPM	EFF	PF	H	H1	X	HD	HO	HM	M	HA	HE	HG	HJ	Y	HT	HC	C	CP	L	HL	T	HH	HP	HF1	HF2	HB	Wt. (lb)
15	ODP	213/5T	208-230/460	3535	90.2	0.89	4.3	6.3	7.1	10.6	17.7	15.5	8.0	17.3	7.9	0.57	1.9	3.9	0.50	36.4	17.8	18.1	0.96	3.54	1.50	0.80	4.5	15	15	39	365
15	TEFC	254/6T	208-230/460	3530	91	0.88	4.3	6.3	7.1	10.6	17.7	19.3	10.5	20.8	9.6	0.57	1.9	3.9	0.50	43.7	25.0	18.1	1.11	3.39	1.50	0.80	4.5	18	18	45	530
15	ODP	213/5T	575	3535	90.2	0.89	4.3	6.3	7.1	10.6	17.7	15.5	8.0	17.3	7.9	0.57	1.9	3.9	0.50	36.4	17.8	18.1	0.96	3.54	1.50	0.80	4.5	15	15	39	364
15	TEFC	254/6T	575	3530	91	0.88	4.3	6.3	7.1	10.6	17.7	19.3	10.5	20.8	9.6	0.57	1.9	3.9	0.50	43.7	25.0	18.1	1.11	3.39	1.50	0.80	4.5	18	18	45	529
20	ODP	254/6T	208-230/460	3525	91	0.87	4.3	6.3	7.1	10.6	17.7	16.4	9.5	20.8	9.6	0.57	1.9	3.9	0.50	39.1	20.5	18.1	1.11	3.39	1.50	0.80	4.5	18	18	45	433
20	TEFC	254/6T	208-230/460	3520	91	0.89	4.3	6.3	7.1	10.6	17.7	19.3	10.5	20.8	9.6	0.57	1.9	3.9	0.50	43.7	25.0	18.1	1.11	3.39	1.50	0.80	4.5	18	18	45	555
20	ODP	254/6T	575	3525	91	0.87	4.3	6.3	7.1	10.6	17.7	16.4	9.5	20.8	9.6	0.57	1.9	3.9	0.50	39.1	20.5	18.1	1.11	3.39	1.50	0.80	4.5	18	18	45	432
20	TEFC	254/6T	575	3520	91	0.89	4.3	6.3	7.1	10.6	17.7	19.3	10.5	20.8	9.6	0.57	1.9	3.9	0.50	43.7	25.0	18.1	1.11	3.39	1.50	0.80	4.5	18	18	45	554
25	ODP	254/6T	208-230/460	3530	91.7	0.87	4.3	6.3	7.1	10.6	17.7	16.4	9.5	20.8	9.6	0.57	1.9	3.9	0.50	39.1	20.5	18.1	1.11	3.39	1.50	0.80	4.5	18	18	45	450
25	TEFC	284/6TS	208-230/460	3545	91.7	0.88	4.3	7.0	7.1	11.3	18.4	20.5	11.1	20.8	9.6	0.57	1.9	3.9	0.50	45.2	26.6	18.1	0.96	3.54	1.50	0.80	4.5	20	20	49	677
25	ODP	254/6T	575	3530	91.7	0.87	4.3	6.3	7.1	10.6	17.7	16.4	9.5	20.8	9.6	0.57	1.9	3.9	0.50	39.1	20.5	18.1	1.11	3.39	1.50	0.80	4.5	18	18	45	449
25	TEFC	284/6TS	575	3535	91.7	0.89	4.3	7.0	7.1	11.3	18.4	20.5	11.1	20.8	9.6	0.57	1.9	3.9	0.50	45.2	26.6	18.1	0.96	3.54	1.50	0.80	4.5	20	20	49	675
30	ODP	284TS	208-230/460	3545	91.7	0.86	4.3	7.0	7.1	11.3	18.4	20.1	11.9	20.8	9.6	0.57	1.9	3.9	0.50	40.6	22.0	18.1	1.11	3.39	1.50	0.80	4.5	18	18	45	575
30	TEFC	284/6TS	208-230/460	3540	91.7	0.89	4.3	7.0	7.1	11.3	18.4	20.5	11.1	20.8	9.6	0.57	1.9	3.9	0.50	45.2	26.6	18.1	0.96	3.54	1.50	0.80	4.5	20	20	49	695
30	ODP	284TS	575	3545	91.7	0.86	4.3	7.0	7.1	11.3	18.4	20.1	11.9	20.8	9.6	0.57	1.9	3.9	0.50	40.6	22.0	18.1	1.11	3.39	1.50	0.80	4.5	18	18	45	573
30	TEFC	284/6TS	575	3535	91.7	0.89	4.3	7.0	7.1	11.3	18.4	20.5	11.1	20.8	9.6	0.57	1.9	3.9	0.50	45.2	26.6	18.1	0.96	3.54	1.50	0.80	4.5	20	20	49	694

Submittal Data Sheet

Wilo NL-HE – Base Mounted End Suction Pumps

NL-HE 2.5 x 1.5 x 10 (2 Pole)

Project:	
Engineer:	
Contractor:	
Submitted By:	Date:
Approved By:	Date:

Tag #	Model #	Flow (USGPM)	Head (Feet)	HP	Enclosure	Frame	Cycle	Phase	Voltage	RPM
	NL-HE 2.5 x 1.5 x 10						**60Hz**	**3**		

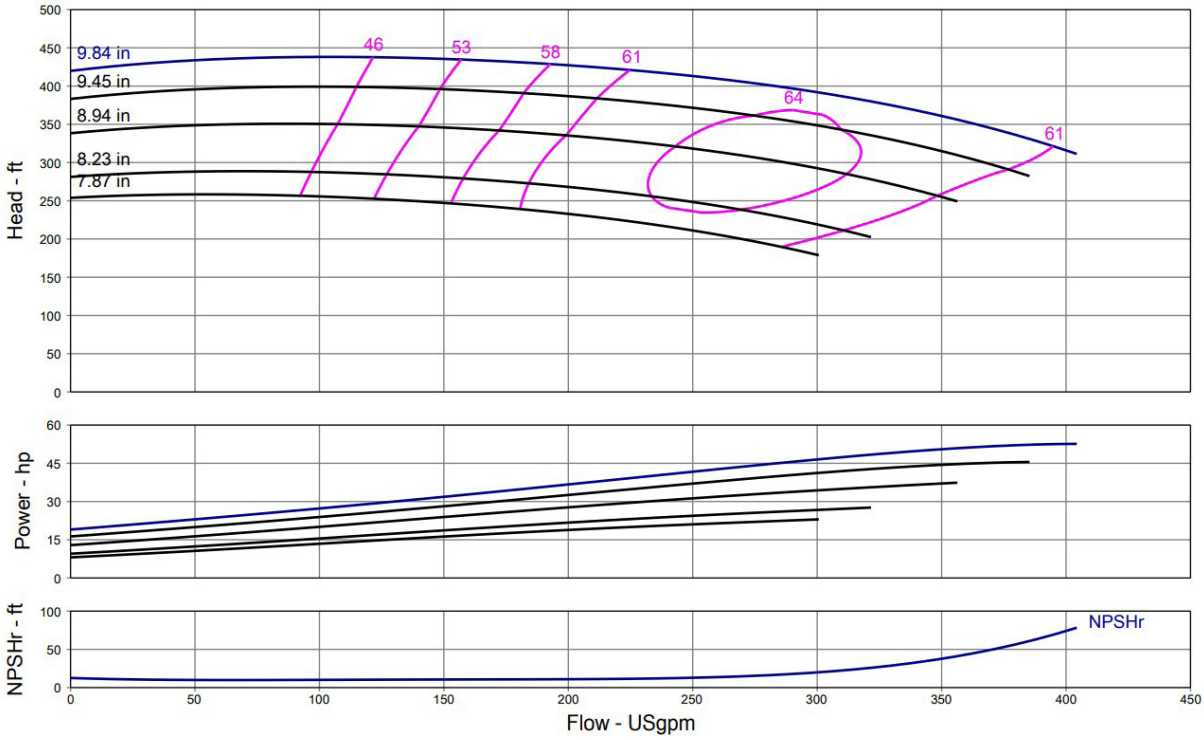

Technical Data	
PEI	
0.91	
Approved Fluids	
Heating Water	
Cooling and cold water	
Pressure /Temperature Ratings	
Ambient Temperature:	+5 °F to +104 °F (-15 °C to +40 °C)
Max Working Pressure & Temperature:	189 psi (up to 284 °F Fluid Temperature) 232 psi (up to 248 °F Fluid Temperature)
Water-Glycol Mixtures for 20-40% glycol and fluid temp ≤ 104°F (40°C)	

Materials of Construction		
☐	Pump Housing	EN-GL-250 Gray Cast Iron
☐	Impeller	EN 1.4408 Cast Stainless Steel
☐	Impeller (optional)	CC480K Bronze or EN-GJL 1030 Cast Iron
☐	Pump Shaft	1.4021 + QT700 Stainless Steel
☐	Mechanical Seal	Carbon/silicon carbide/ EPDM (E1)
☐	Other Mechanical Seals	Avail. on request
☐	Additional Spacer Coupling	Avail. on request
☐	Other:	

Approval Stamp

Submittal Data Sheet

Wilo NL-HE – Base Mounted End Suction Pumps

Dimensions & Weights

Wilo NL-HE

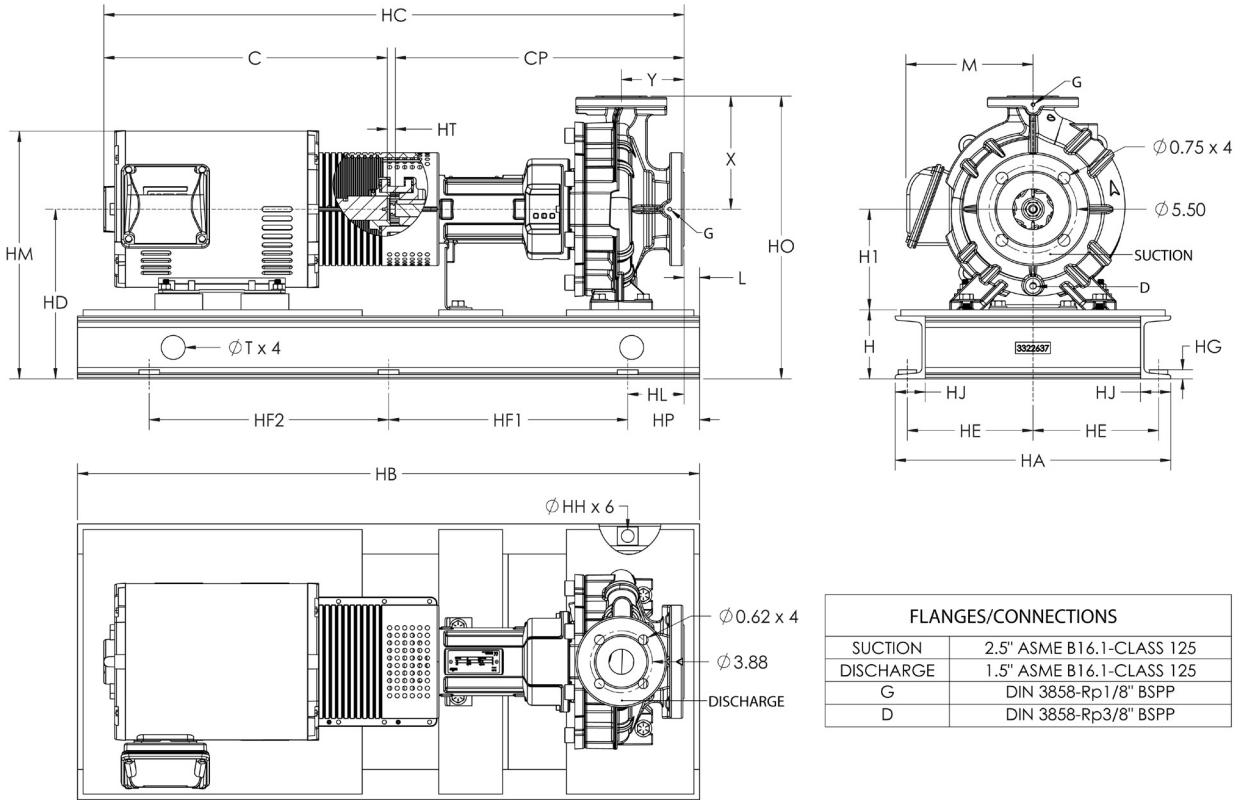

FLANGES/CONNECTIONS	
SUCTION	2.5" ASME B16.1-CLASS 125
DISCHARGE	1.5" ASME B16.1-CLASS 125
G	DIN 3858-Rp1/8" BSPP
D	DIN 3858-Rp3/8" BSPP

NL-HE 2.5 x 1.5 x 10

Motor							Dimensions – Inches																								
HP	ENCL	Frame	Volt	RPM	EFF	PF	H	H1	X	HD	HO	HM	M	HA	HE	HG	HJ	Y	HT	HC	C	CP	L	HL	T	HH	HP	HF1	HF2	HB	Wt. (lb)
25	ODP	254/6T	208–230/460	3530	91.7	0.87	4.3	7.1	8.9	11.4	20.3	17.2	9.5	20.8	9.6	0.57	1.9	3.9	0.50	39.1	20.5	18.1	1.11	3.39	1.50	0.80	4.5	18	18	45	475
25	TEFC	284/6TS	208–230/460	3545	91.7	0.88	4.3	7.1	8.9	11.4	20.3	20.6	11.1	20.8	9.6	0.57	1.9	3.9	0.50	45.2	26.6	18.1	1.11	3.39	1.50	0.80	4.5	20	20	49	696
25	ODP	254/6T	575	3530	91.7	0.87	4.3	7.1	8.9	11.4	20.3	17.2	9.5	20.8	9.6	0.57	1.9	3.9	0.50	39.1	20.5	18.1	1.11	3.39	1.50	0.80	4.5	18	18	45	474
25	TEFC	284/6TS	575	3535	91.7	0.89	4.3	7.1	8.9	11.4	20.3	20.6	11.1	20.8	9.6	0.57	1.9	3.9	0.50	45.2	26.6	18.1	1.11	3.39	1.50	0.80	4.5	20	20	49	694
30	ODP	284TS	208–230/460	3545	91.7	0.86	4.3	7.1	8.9	11.4	20.3	20.1	11.9	20.8	9.6	0.57	1.9	3.9	0.50	40.6	22.0	18.1	1.11	3.39	1.50	0.80	4.5	18	18	45	594
30	TEFC	284/6TS	208–230/460	3540	91.7	0.89	4.3	7.1	8.9	11.4	20.3	20.6	11.1	20.8	9.6	0.57	1.9	3.9	0.50	45.2	26.6	18.1	1.11	3.39	1.50	0.80	4.5	20	20	49	714
30	ODP	284TS	575	3545	91.7	0.86	4.3	7.1	8.9	11.4	20.3	20.1	11.9	20.8	9.6	0.57	1.9	3.9	0.50	40.6	22.0	18.1	1.11	3.39	1.50	0.80	4.5	18	18	45	592
30	TEFC	284/6TS	575	3535	91.7	0.89	4.3	7.1	8.9	11.4	20.3	20.6	11.1	20.8	9.6	0.57	1.9	3.9	0.50	45.2	26.6	18.1	1.11	3.39	1.50	0.80	4.5	20	20	49	713
40	ODP	284/6TS	208–230/460	3540	92.4	0.87	4.3	7.1	8.9	11.4	20.3	20.1	11.9	20.8	9.6	0.57	1.9	3.9	0.50	41.9	23.3	18.1	1.11	3.39	1.50	0.80	4.5	18	18	45	638
40	TEFC	324/6TS	208–230/460	3555	92.4	0.89	4.3	8.0	8.9	12.3	21.2	22.7	12.6	20.8	9.6	0.57	1.9	3.9	0.85	48.6	29.6	18.1	1.11	3.39	1.50	0.80	4.5	20	20	49	870
40	ODP	284/6TS	575	3540	92.4	0.87	4.3	7.1	8.9	11.4	20.3	20.1	11.9	20.8	9.6	0.57	1.9	3.9	0.50	41.9	23.3	18.1	1.11	3.39	1.50	0.80	4.5	18	18	45	636
40	TEFC	324/6TS	575	3555	92.4	0.89	4.3	8.0	8.9	12.3	21.2	22.7	12.6	20.8	9.6	0.57	1.9	3.9	0.85	48.6	29.6	18.1	1.11	3.39	1.50	0.80	4.5	20	20	49	867
50	ODP	324TS	208–230/460	3560	93	0.85	4.3	8.0	8.9	12.3	21.2	22.1	13.4	20.8	9.6	0.57	1.9	3.9	0.85	43.3	24.3	18.1	1.11	3.39	1.50	0.80	4.5	18	18	45	722
50	TEFC	324/6TS	208–230/460	3550	93	0.89	4.3	8.0	8.9	12.3	21.2	22.7	12.6	20.8	9.6	0.57	1.9	3.9	0.85	48.6	29.6	18.1	1.11	3.39	1.50	0.80	4.5	20	20	49	893
50	ODP	324TS	575	3560	93	0.85	4.3	8.0	8.9	12.3	21.2	22.1	13.4	20.8	9.6	0.57	1.9	3.9	0.85	43.3	24.3	18.1	1.11	3.39	1.50	0.80	4.5	18	18	45	719
50	TEFC	324/6TS	575	3550	93	0.89	4.3	8.0	8.9	12.3	21.2	22.7	12.6	20.8	9.6	0.57	1.9	3.9	0.85	48.6	29.6	18.1	1.11	3.39	1.50	0.80	4.5	20	20	49	889
60	ODP	324/6TS	208–230/460	3560	93.6	0.85	4.3	8.0	8.9	12.3	21.2	22.1	13.4	20.8	9.6	0.57	1.9	3.9	0.85	44.8	25.8	18.1	1.11	3.39	1.50	0.80	4.5	18	18	45	767
60	TEFC	364/5TS	208–230/460	3560	93.6	0.9	6.0	9.0	8.9	15.0	23.8	24.0	16.0	23.7	10.9	0.64	2.4	3.9	0.85	51.3	32.3	18.1	1.56	4.44	2.25	0.95	6.0	20	20	52	1298
60	ODP	324/6TS	575	3560	93.6	0.85	4.3	8.0	8.9	12.3	21.2	22.1	13.4	20.8	9.6	0.57	1.9	3.9	0.85	44.8	25.8	18.1	1.11	3.39	1.50	0.80	4.5	18	18	45	764
60	TEFC	364/5TS	575	3560	93.6	0.9	6.0	9.0	8.9	15.0	23.8	24.0	16.0	23.7	10.9	0.64	2.4	3.9	0.85	51.3	32.3	18.1	1.56	4.44	2.25	0.95	6.0	20	20	52	1294