Submittal Data Sheet

Vertical Multistage Pumps

Wilo-Helix

Project:	
Engineer:	
Contractor:	
Submitted By:	Date:
Approved By:	Date:

Tag #	Model #	Flow	Head	Volute	Control Mode	HP	Phase	Voltage
	Helix V 110						3	460

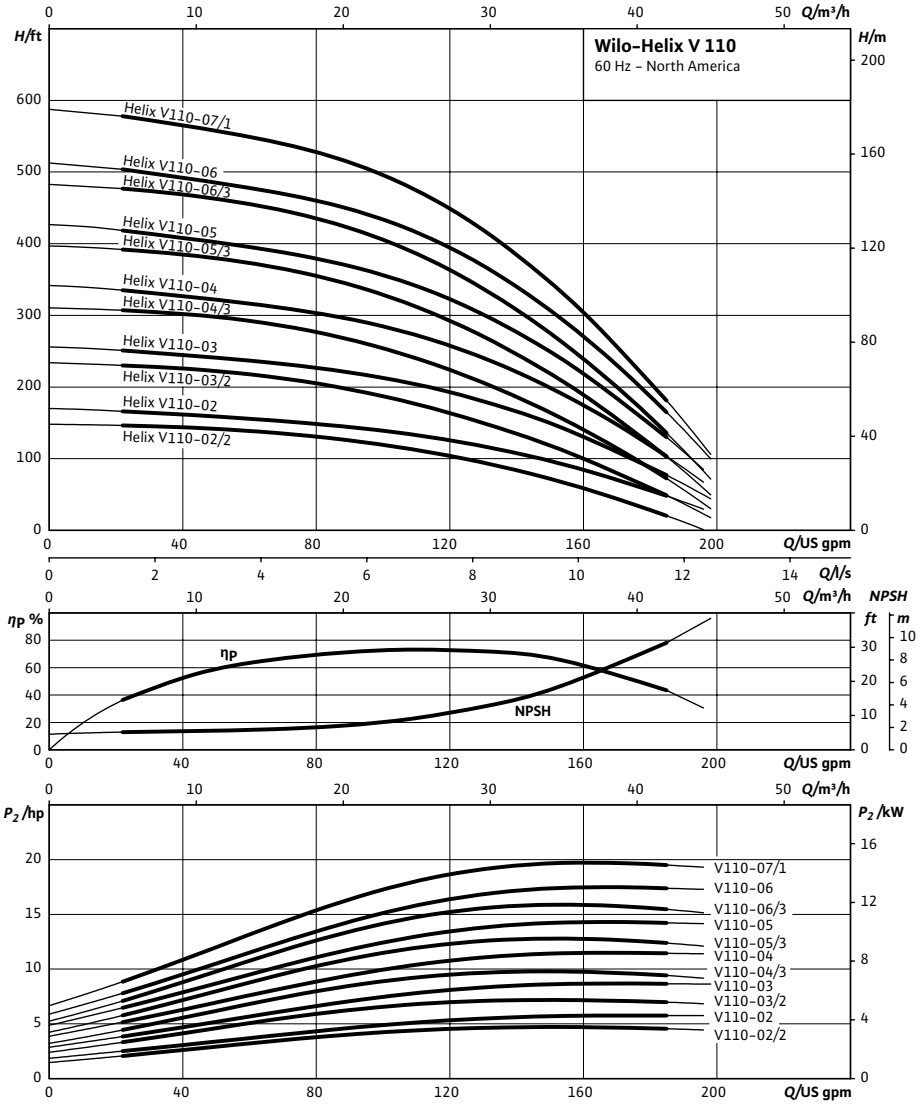

Product Info	
Brand	Wilo
Product Description	Helix V 110

Technical Data	
PEI	(See page 2)
Certification	NSF 61 Approved (EPDM)
Liquid Temp Range	-4°F to +248°F
Power Supply	3~ 208-230v, 3~ 460v, 3~ 575v
Ambient Temperature	+5°F to +104°F
Flange Connection	ANSI CLASS 300
Max Operating Pressure	232/363 PSI
Protection Class	IP 55

Construction Materials	
Pump Volute, flanges, impeller, stage housing, diffusers	Stainless steel AISI 304
Shaft	Stainless steel AISI 304 or AISI 318LN (Depending on version)
Shaft sleeves	Stainless Steel AISI 316L
Baseplate & lantern	Cast Iron Cataphoresis Coated ASTM A 48 Class 35/40
O-ring	EPDM (FKM upon request)
Jacket pipe	Stainless Steel AISI 304

Applications	
Water Supply & Pressure Boosting	Industrial circulation systmes
Cooling water circulation systems	Process water
Washing systems	Irrigation

Approval Stamp

Submittal Data Sheet

Vertical Multistage Pumps

Wilo-Helix

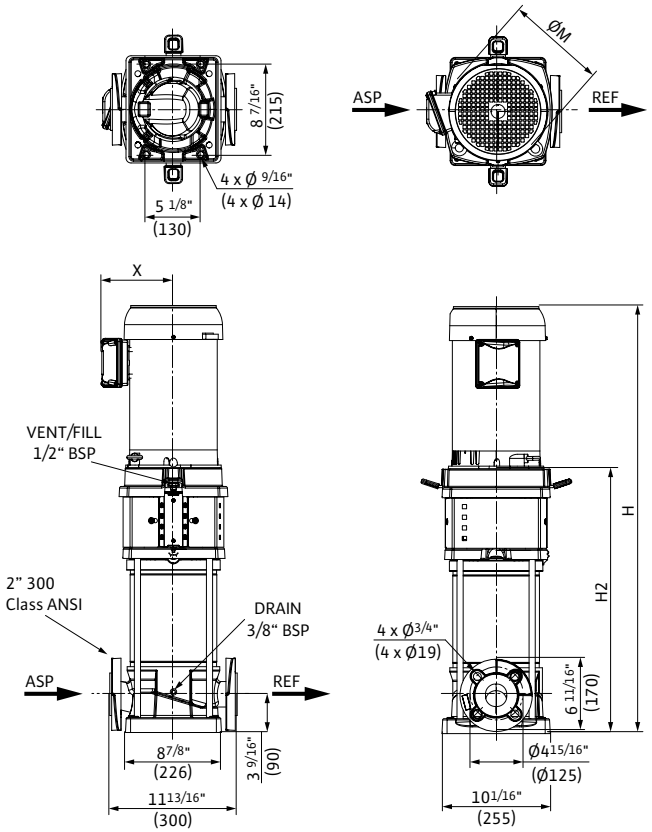

Dimensions and Weights												TEFC Motor Data			
	PEI	H		H_2		Ø M		X						208-230/460 V	575 V
		Dimensions-inches (mm)								Weight		P2	Phase	FLA	FLA
Model	PEI	in	mm	in	(mm)	in	(mm)	in	(mm)	lbs	kg	[HP]	[~]	[A]	[A]
Helix V 110-02/2	0.87	37 1/16	941	20	508	9 7/16	240	11	279	193	87.54	5	3	13.1-11.8/5.9	4.72
Helix V 110-02	0.87	45 3/16	1148	25	635	10 15/16	278	13	330	295	133.81	10	3	25.4-23/11.5	9.2
Helix V 110-03/2	0.87	47¼	1200	27	686	10 15/16	278	13	330	304	137.89	10	3	25.4-23/11.5	9.2
Helix V 110-03	0.87	47¼	1200	27	686	10 15/16	278	13	330	306	138.8	10	3	25.4-23/11.5	9.2
Helix V 110-04/3	0.87	49 3/16	1249	29	737	10 15/16	278	13	330	309	140.16	10	3	25.4-23/11.5	9.2
Helix V 110-04	0.87	51¼	1302	29	737	13 3/16	335	16	406	321	145.60	15	3	38.5-34.8/17.4	13.8
Helix V 110-05/3	0.87	53¼	1302	31	787	13 3/16	335	16	406	332	150.59	15	3	38.5-34.8/17.4	13.8
Helix V 110-05	0.87	53¼	1302	31	787	13 3/16	335	16	406	325	147.42	15	3	38.5-34.8/17.4	13.8
Helix V 110-06/3	0.89	56	1422	33	838	13 3/16	335	16	406	375	170.10	20	3	50.2-45.4/22.7	18.2
Helix V 110-06	0.89	56	1422	33	838	13 3/16	335	16	406	372	168.74	20	3	50.2-45.4/22.7	18.2
Helix V 110-07/1	-	58	1473	35	889	13 3/16	335	16	406	377	171	20	3	50.2-45.4/22.7	18.2

Submittal Data Sheet

Vertical Multistage Pumps

Wilo-Helix

Project:	
Engineer:	
Contractor:	
Submitted By:	Date:
Approved By:	Date:

Tag #	Model #	Flow	Head	Volute	Control Mode	HP	Phase	Voltage
	Helix V 190						3	460

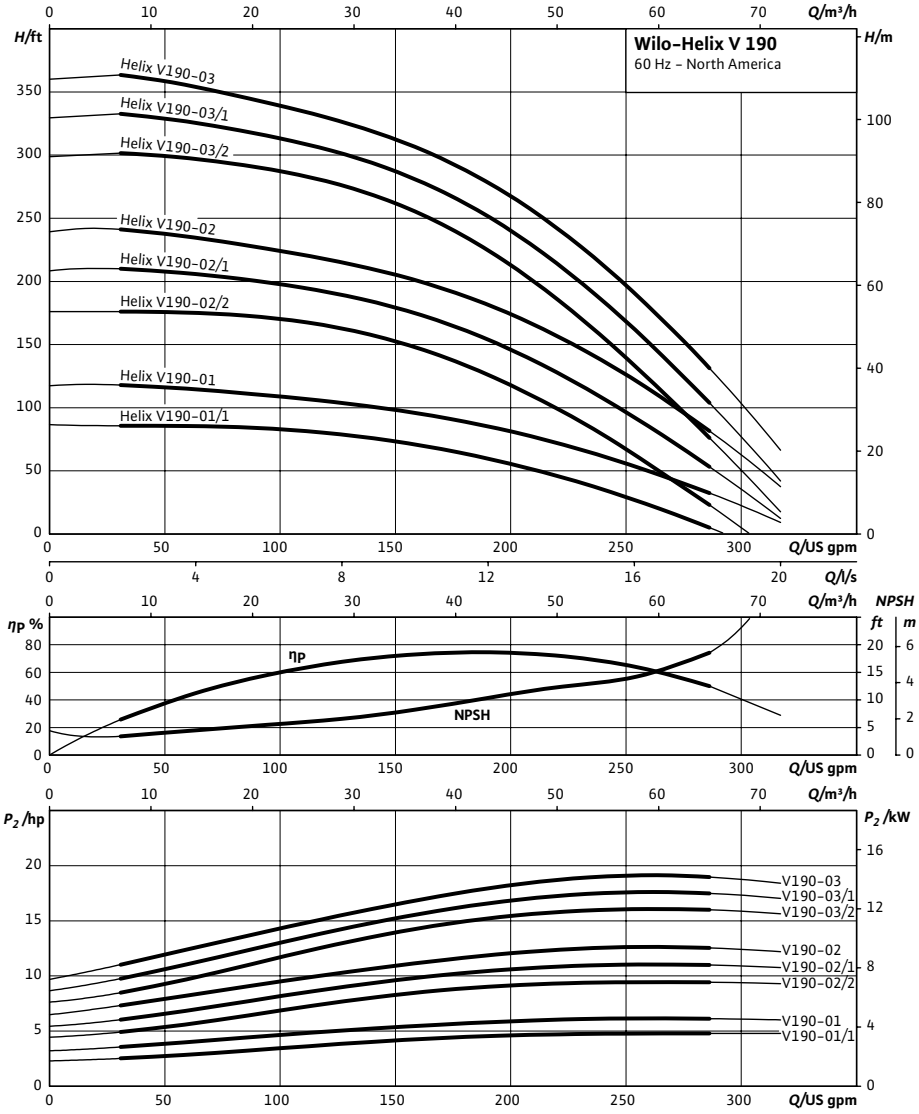

Product Info

Brand	Wilo
Product Description	Helix V 190

Technical Data

PEI	(See page 2)
Certification	NSF 61 Approved (EPDM)
Liquid Temp Range	-4°F to +248°F
Power Supply	3~ 208-230v, 3~ 460v, 3~ 575v
Ambient Temperature	+5°F to +104°F
Flange Connection	ANSI CLASS 300
Max Operating Pressure	232/363 PSI
Protection Class	IP 55

Construction Materials

Pump Volute, flanges, impeller, stage housing, diffusers	Stainless steel AISI 304
Shaft	Stainless steel AISI 304 or AISI 318LN (Depending on version)
Shaft sleeves	Stainless Steel AISI 316L
Baseplate & lantern	Cast Iron Cataphoresis Coated ASTM A 48 Class 35/40
O-ring	EPDM (FKM upon request)
Jacket pipe	Stainless Steel AISI 304

Applications

Water Supply & Pressure Boosting	Industrial circulation systmes
Cooling water circulation systems	Process water
Washing systems	Irrigation

Approval Stamp

Submittal Data Sheet

Vertical Multistage Pumps

Wilo-Helix

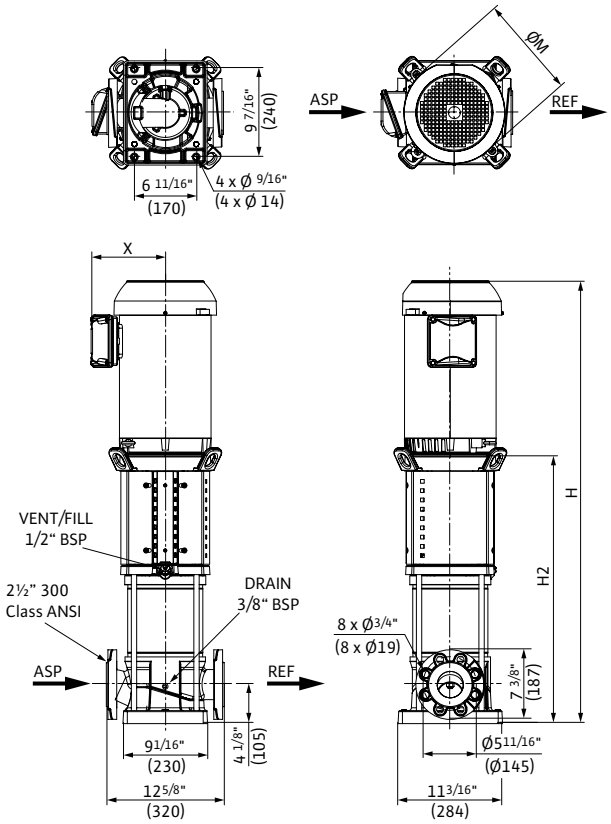

Dimensions and Weights												TEFC Motor Data			
	PEI	H		H_2		Ø M		X						208-230/460 V	575 V
		Dimensions-inches (mm)								Weight		P2	Phase	FLA	FLA
Model	**PEI**	**in**	**mm**	**in**	**(mm)**	**in**	**(mm)**	**in**	**(mm)**	**lbs**	**kg**	**[HP]**	**[~]**	**[A]**	**[A]**
Helix V 190-01/1	0.94	35 13/16	910	19	483	9 7/16	240	11	279	204	92.53	5	3	13.1-11.8/5.9	4.72
Helix V 190-01	0.94	44	1118	24	610	10 15/16	278	13	330	315	142.88	10	3	25.4-23/11.5	9.2
Helix V 190-02/2	0.92	46 5/8	1184	26	660	10 15/16	278	13	330	322	146.06	10	3	25.4-23/11.5	9.2
Helix V 190-02/1	0.92	48¾	1238	26	660	13 3/16	335	16	406	332	150.59	15	3	38.5-34.8/17.4	13.8
Helix V 190-02	0.92	48¾	1238	26	660	13 3/16	335	16	406	332	150.59	15	3	38.5-34.8/17.4	13.8
Helix V 190-03/2	0.93	52 3/16	1326	29	737	13 3/16	335	16	406	383	173.73	20	3	50.2-45.4/22.7	18.2
Helix V 190-03/1	0.93	52 3/16	1326	29	737	13 3/16	335	16	406	383	173.73	20	3	50.2-45.4/22.7	18.2
Helix V 190-03	0.93	52 3/16	1326	29	737	13 3/16	335	16	406	383	173.73	20	3	50.2-45.4/22.7	18.2

Submittal Data Sheet

Vertical Multistage Pumps

Wilo-Helix

Project:	
Engineer:	
Contractor:	
Submitted By:	Date:
Approved By:	Date:

Tag #	Model #	Flow	Head	Volute	Control Mode	HP	Phase	Voltage
	Helix V 270						3	460

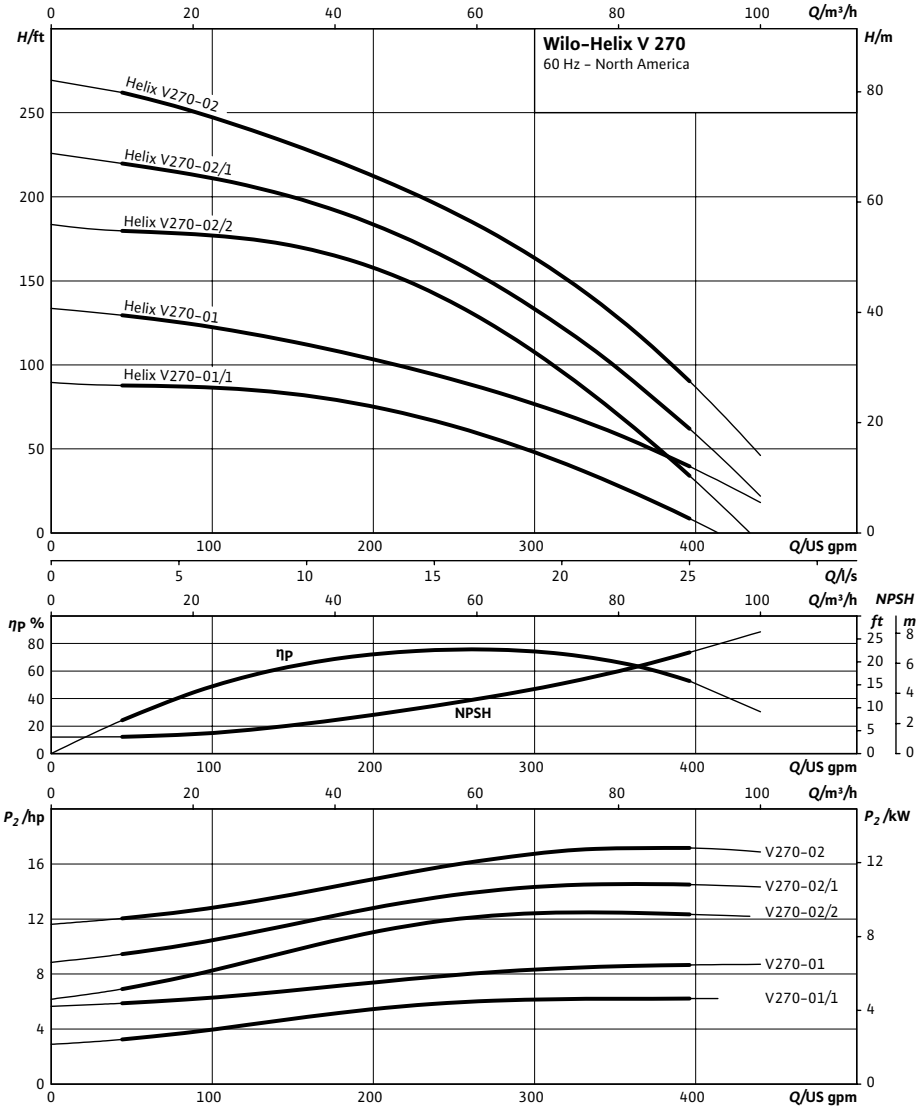

Product Info

Brand	Wilo
Product Description	Helix V 270

Technical Data

PEI	(See page 2)
Certification	NSF 61 Approved (EPDM)
Liquid Temp Range	-4°F to +248°F
Power Supply	3~ 208-230v, 3~ 460v, 3~ 575v
Ambient Temperature	+5°F to +104°F
Flange Connection	ANSI CLASS 300
Max Operating Pressure	232/363 PSI
Protection Class	IP 55

Construction Materials

Pump Volute, flanges, impeller, stage housing, diffusers	Stainless steel AISI 304
Shaft	Stainless steel AISI 304 or AISI 318LN (Depending on version)
Shaft sleeves	Stainless Steel AISI 316L
Baseplate & lantern	Cast Iron Cataphoresis Coated ASTM A 48 Class 35/40
O-ring	EPDM (FKM upon request)
Jacket pipe	Stainless Steel AISI 304

Applications

Water Supply & Pressure Boosting	Industrial circulation systmes
Cooling water circulation systems	Process water
Washing systems	Irrigation

Approval Stamp

Submittal Data Sheet

Vertical Multistage Pumps

Wilo-Helix

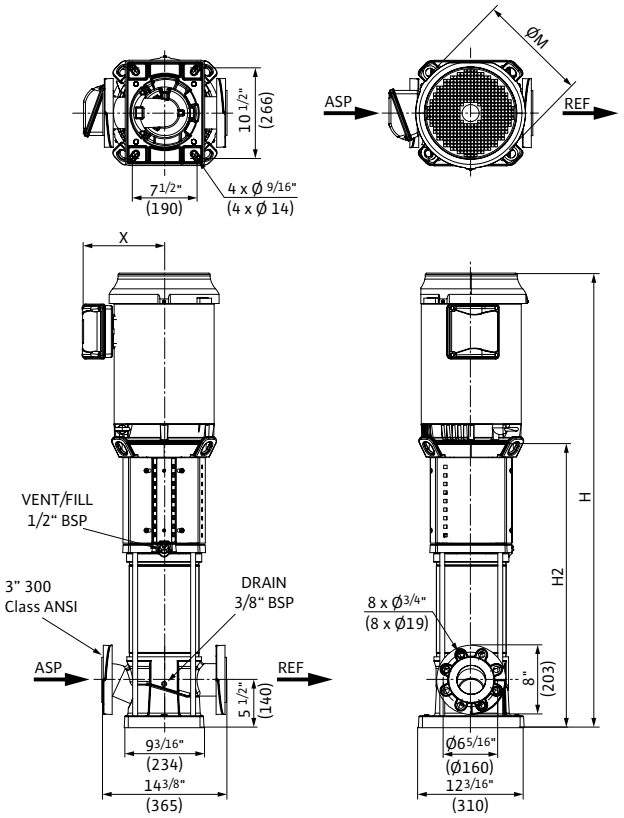

Dimensions and Weights												TEFC Motor Data			
	PEI	H		H_2		Ø M		X						208-230/460 V	575 V
		Dimensions-inches (mm)								Weight		P2	Phase	FLA	FLA
Model	**PEI**	**in**	**mm**	**in**	**(mm)**	**in**	**(mm)**	**in**	**(mm)**	**lbs**	**kg**	**[HP]**	**[~]**	**[A]**	**[A]**
Helix V 270-01/01	0.96	45 5/16	1151	25	635	10 15/16	278	13	330	328	148.78	10	3	25.4-23/11.5	9.2
Helix V 270-01	0.96	45 5/16	1151	25	635	10 15/16	278	13	330	331	150.14	10	3	25.4-23/11.5	9.2
Helix V 270-02/2	0.94	51 3/8	1305	29	737	13 3/16	335	16	406	358	162.39	15	3	38.5-34.8/17.4	13.8
Helix V 270-02/1	0.94	51 3/8	1305	29	737	13 3/16	335	16	406	358	162.39	15	3	38.5-34.8/17.4	13.8
Helix V 270-02/1	0.94	43 7/16	1103	29	737	9 7/8	251	13	330	314	142.43	15	3	38.5-34.8/17.4	13.8
Helix V 270-02	0.94	52 3/16	1326	29	737	13 3/16	335	16	406	394	178.72	20	3	50.2-45.4/22.7	18.2